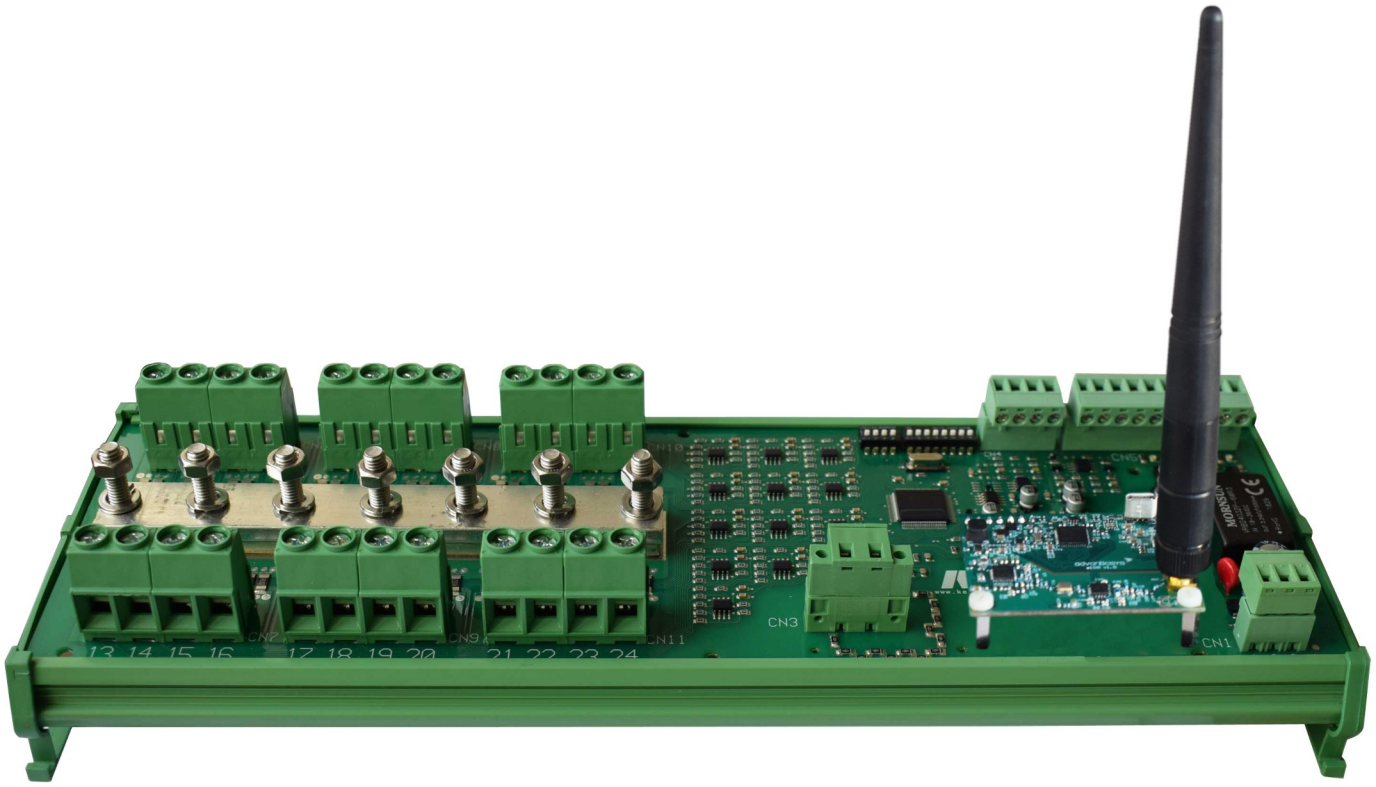

ST2N 2425 WR

24 channels

DATA SHEET

rev. 1.4
31 August 2023

Kernel Sistemi
Kernel Sistemi s.r.l. , via Vignolese n. 1138
41126 Modena - ITALY
Tel. 059 469 978 - Fax 059 468 874
www.kernelgroup.it

INDEX

1 SAFETY....3

2 GENERAL NOTES....4

2.1 Introduction....4

3 HARDWARE CHARACTERISTICS....6

3.1 Hardware Characteristics....6
3.2 Power Dissipation....7
3.3 Connector : CN1....8
3.4 Connector : CN3....8
3.5 Connector : CN4....8
3.6 Connector : CN5....9
3.7 Board dimensions....10
3.8 Connection Type : ST2N 2425Nx WRAD....10
3.9 Busbar....11
3.10 Dip-switches....12
3.11 Informations about wires and connectors....13
3.12 Memory Protection....14
3.13 Fixing system of the naked board (without supporting box)....14
3.14 Status led....14

4 MEMORY MAP....14

4.1 Memory Map Description....19

5 ORDER CODES....20

6 CONTACTS....20

Attention

The information contained in this document may change without notice.
*Therefore, please check our website (**www.kernelgroup.it**) regularly*
and always download the latest version available.

1 SAFETY

This product is a String Monitoring System (SMU) and its application is the monitoring of photovoltaic systems. From an electrical point of view, by their nature, photovoltaic systems operate in direct current and with very high voltage and current values.

Safety : General Conditions		
	DANGER	- This product is therefore designed to operate with direct current voltage values up to 1500 VDC. This voltage value is potentially fatal. Voltage values between 24 VDC and 1500 VDC are therefore present on this product. - All transducers connected to the auxiliary input connectors must be isolated at 1500 VDC. These transducers are PT100 and, in the case of the ST2N and ST2 series, also transducers with 0/10 VDC and 0/20 mA output (typically anemometers)

Safety : Installation and replacement precautions		
	DANGER	- The installation and / or replacement of this product must take place in absolute safety, therefore it is necessary to proceed with the installation and / or replacement of this product which is housed inside the field panel after disconnecting the power and dangerous voltages from solar panels. - In any case, any intervention involving the handling of the SMU must be carried out by skilled and trained technicians equipped with insulation gloves designed for voltage values up to 1500 VDC and after disconnecting any voltage and current from the solar panels.

Important Safety Instructions		
	DANGER	- Contact with wiring terminals inside the device can cause death by electric shock! - Before to operate inside cards with tester, or with other measurement equipment, it is mandatory TO OPEN fuses and other components that can bring high level voltage inside cards.
	WARNING	- Please check all input and output wire terminals in case of high DC voltage and make sure there is no voltage before electrical connection to avoid electric shock! - Do not touch the live parts of the input and output sides to avoid electric shock when checking or maintaining the device. - All installation and wiring connections must be made by qualified technical personnel only.
	CAUTION	- All wiring and operation must comply with the requirements of the relevant local standards of the device. - Check the device and make sure there are no problems with the installation before putting it into operation! - Connect the wires to the positive and negative marked positions of the device to avoid the risk of short circuit, ensure personal safety and keep the device in normal operation.
	IMPORTANT	**Reference to current standards** For any other consideration, safety precaution, it is absolutely necessary, before carrying out any installation and / or replacement of the SMU, to refer to the regulations in force regarding the construction of combiner boxes.

2 GENERAL NOTES

2.1 Introduction

The ST2N module to string control, allow to monitoring current and voltage generated by photovoltaic panels strings. For example is possible connect each other 32 PV panels at 36 V to each string channel, with positive pole connected each other. The negative pole of each string is brought to the dedicated input, like in the following picture :

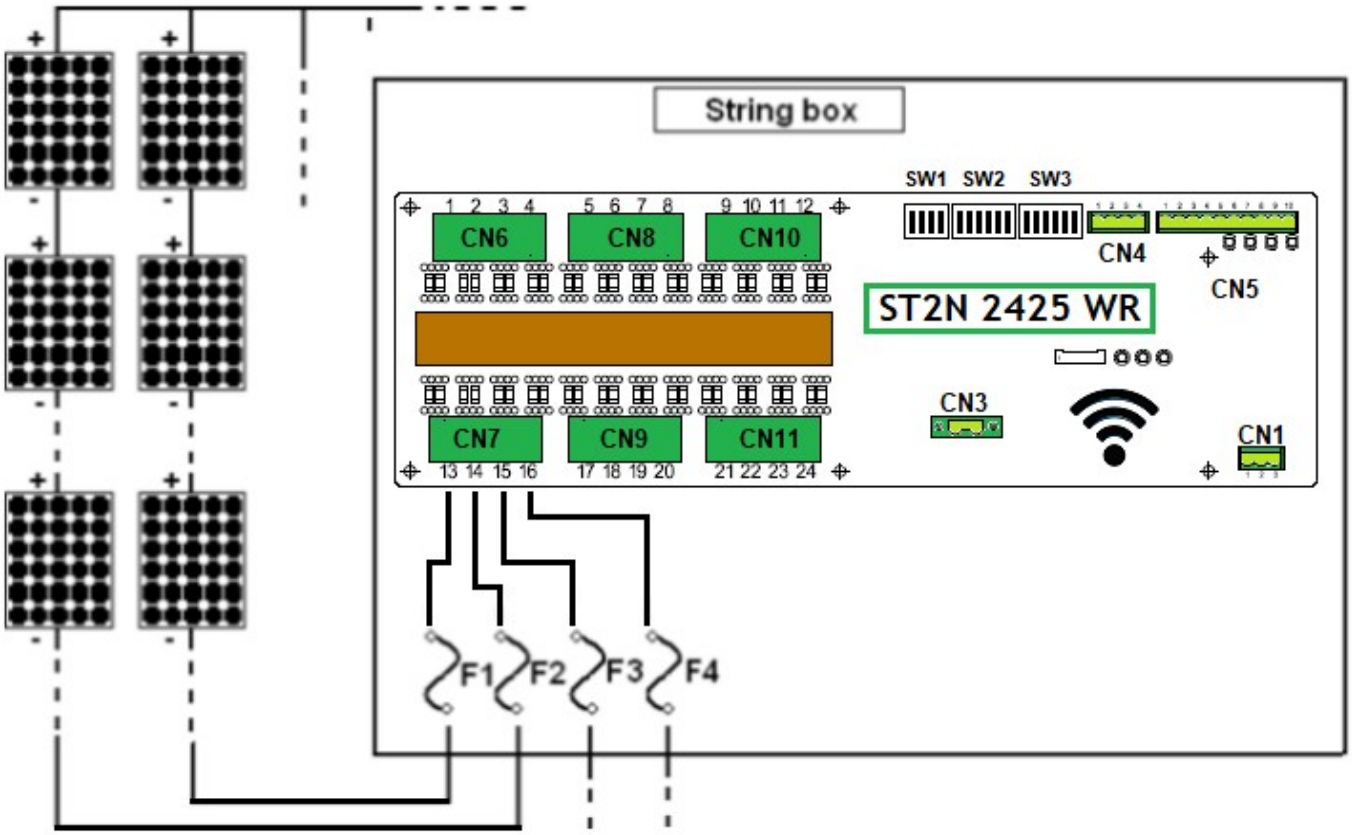

After the strings input connector, on the ST2N board there are two resistors in parallel, they are necessary to detect the current follow :

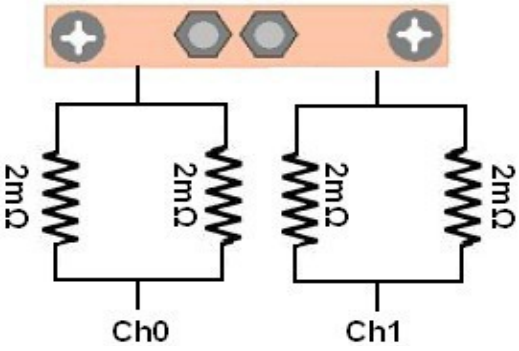

and finally a copper bar connect all the negative poles, thus creating a common 0 V.

The ST2N board also provides four digital inputs and three analog inputs. One analog inputs is for PT100 connection, another one for solarimeter connection and the last analog input is 0 … 20 mA with precision better than 1,5%. The digital inputs allows to detect the arrester state, another input is usually used for a sensor connected to string box panel's closing door and other switches in general, and an auxiliary fourth PNP digital input.

Is possible communicate with the ST2N board through WIRELESS connection. Using **Modbus RTU** protocol, or with **IEC 60870-5-101** protocol, is possible monitoring all the physical quantities measured (temperature, solar intensity, current, digital inputs state ecc...). Moreover is possible keep monitored the fuses status on the string box, through the reading of 2 internal registers on memory map (30034 and 30035).

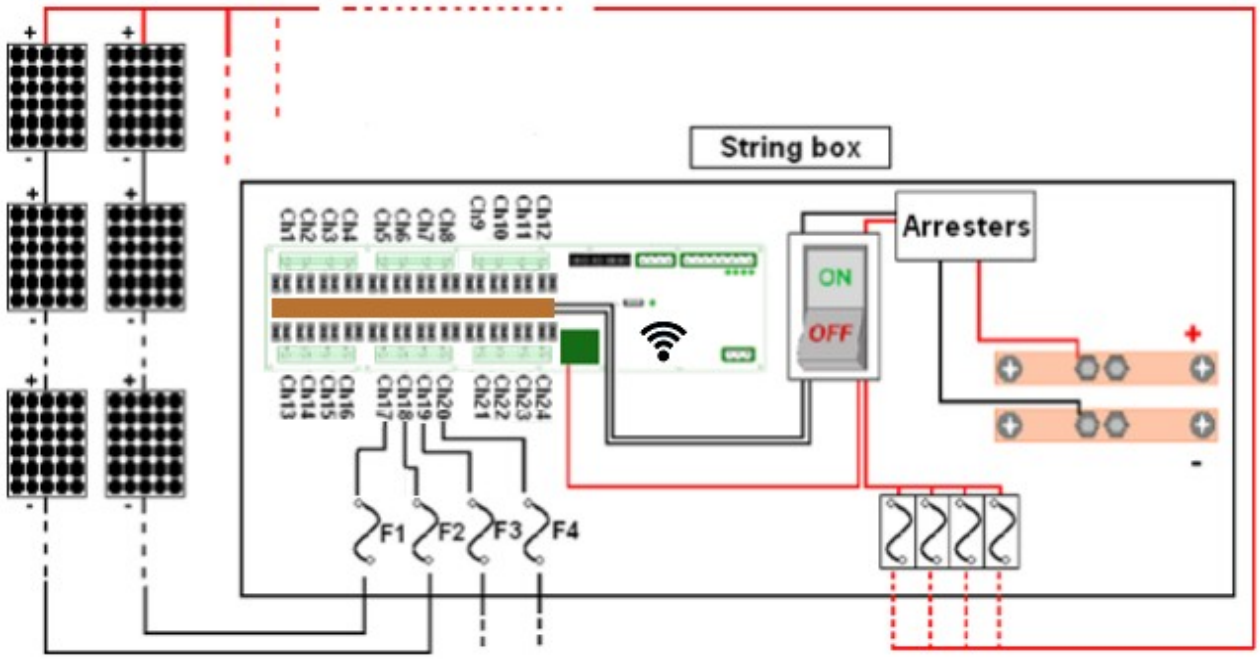

In the following image there are the "ST2N string controller" with all the wiring. Obviously isn't necessary connect all the specified devices, they are indicated to give a connection general idea.

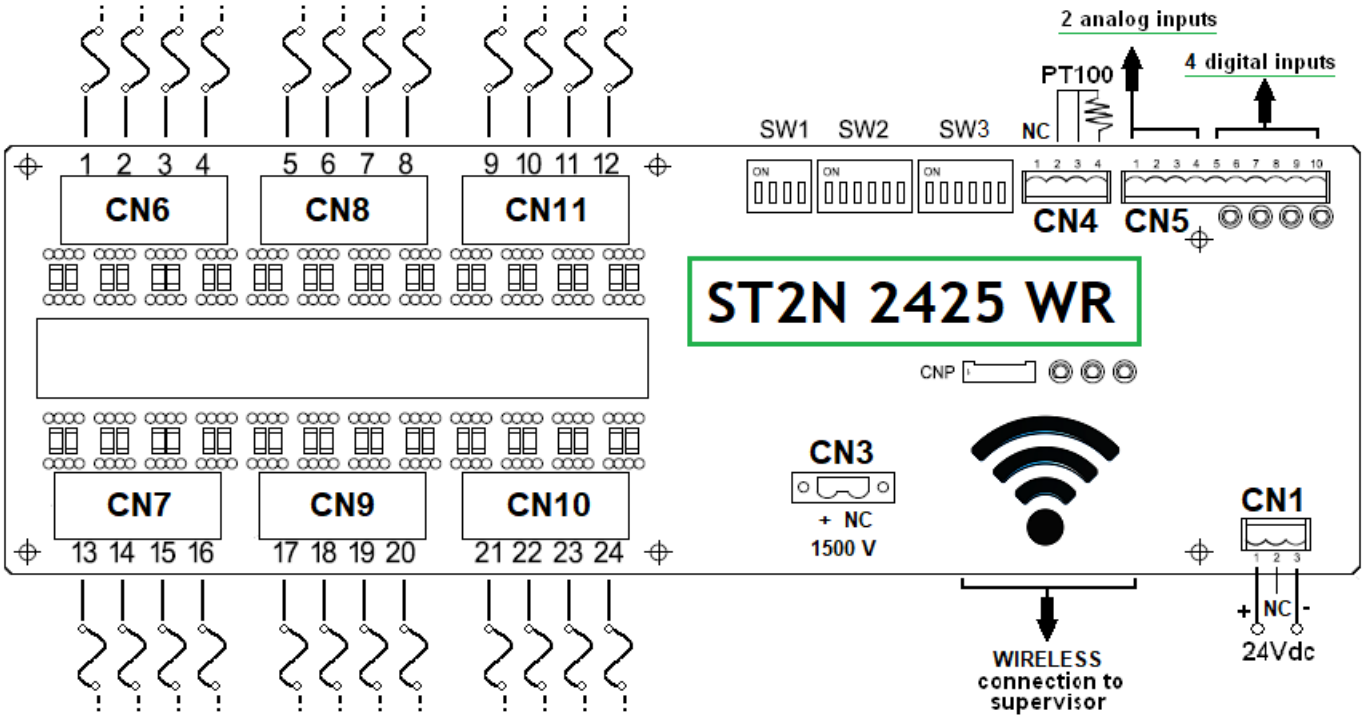

3 HARDWARE CHARACTERISTICS

3.1 Hardware Characteristics

ELECTRIC CHARACTERISTICS		
Microprocessor	STM32F303	
Power supply	24 Vdc	
Power consumption (W)	< 3 W	
Maximum number of monitored strings	24	
Maximum common voltage	1500 V with precision better than 0,5 %	
Max. current for each string	25 A	
Range of measurement	0 … 600 A	
Current reading accuracy	Better than 0,15 %	
Current reading precision	Typical 0,5 %	
Communication	Wireless (**Modbus RTU** or **IEC 60870-5-101**)	
Digital Inputs	4 digital inputs 24 Vdc PNP	
Analog inputs	1 input PT100, 1 current input (0 … 20 mA) and 1 voltage input (0 … 10 V) for solarimeter + one on board temperature sensor to know the temperature inside the string box panel	
Working temperature's range	From -40 to +85 °C	
Working atmosphere	Without corrosive gas	
ID Address	Defined by dip-switches	
Size (naked)	360 x 108 mm	
Size (with support for din rail bar)	364 x 128 mm	
Working humidity	Lower 95 % without condensation	
MTBF	> 500000 hours	
Maximum Operating Altitude	4000 meters	
Minimum Current	1 A (programmable)	from Firmware Version : **1.31** forward
Minimum Voltage	100 V (programmable)	

N°	Type of resources	Symbol	Terminal Block
1	PT100 input (from -20 to +120 °C) to temperature reading, with precision better than 1,5 %	**T1**	**CN4**
1	Sensor on board to switch board's temperature reading (precision better than 1,5 %)	**T2**	**On Board**
1	Analog input from 0 to 10 V for solarimeter connection	**ADC2**	**CN5**
1	Analog input from 0 to 20 mA with precision better 1,5 %	**ADC1**	**CN5**
4	PNP digital inputs 24 Vdc, typically used to arrester connection, switches or other devices	**INP0, INP1 INP2, INP3**	**CN5**
1	WIRELESS Connection. This connection is used to connect many "ST2N string controllers" into a network or to a PC. Is possible select the communication characteristics with some dip-switches on board (node address, baud rate, parity, and communication protocol, that may be **Modbus RTU or IEC 60870-5-101**).	**WIRELESS**	**CN2**
24	This board can manage the current reading of 24 strings until 25 A with typical precision of 0,5 %. and a temperature between -40 and +85 °C	**Ch1 … Ch24**	**CN6, CN7 CN8, CN9 CN10, CN11**

3.2 Power Dissipation

First of all we have to distinguish from "**power dissipation**" to "**power consumption**" : power dissipation is the total amount of power dissipated by the SMU, that is splitted in two parts : the part needed to supply the electronics and the part dissipated by the shunts used to measure the string currents. Only the part needed by the electronic (the power consumption) is to be supplied by the external 24 V power supply, this part is fixed and is typically less then **3 W** (125 mA) for all models of SMU.

The part dissipated by the shunt is variable and depends by the number of shunts and by the current that flows into them. To calculate the dissipation of each channel you can use the following formula, valid for all the SMU model :

Shunt_Power = current * current * 0.001
(where 0.001 is the ohmic resistance of the shunt >> 2 resistors in parallel from 2 mOhm = 1.0 mOhm)
than you have to multiply for the number of channels (shunts)

- **Example ST2N2425 : if you consider a current of 25 A you have :**
  25 * 25 * 0.001 * 24 = 15 W

- **Example ST2N2425 : if you consider a current of 12.5 A you have :**
  12.5 * 12.5 * 0.001 * 24 = 3.75 W

This part of power is not to be supplied by the 24 V external power supply because it is directly generated by the current from PV strings.

IMPORTANT

It is possible to power the board directly from PV panels using an insulated DC/DC power supply for PV usage. Of course keep in mind that before the sunrise and after the sunset the voltage from the PV is zero, so the DC/DC converter does not work and the board is not powered.

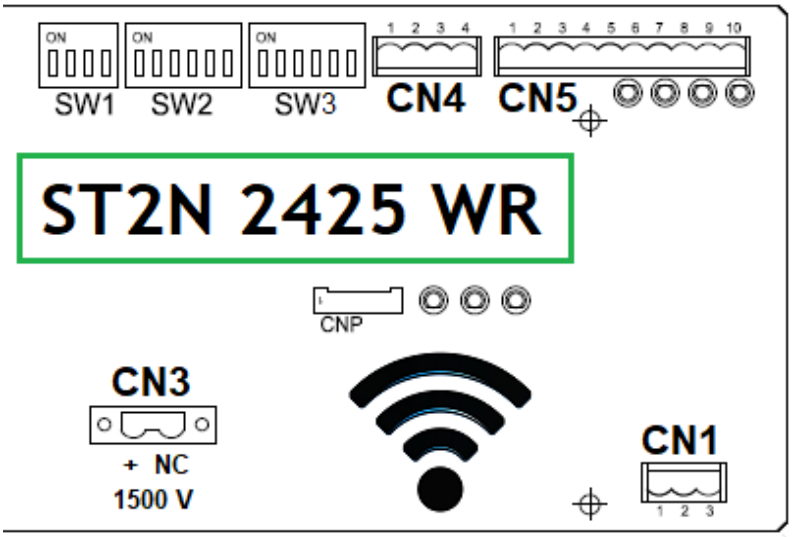

3.3 Connector : CN1

3.4 Connector : CN3

To read the voltages, is necessary connect the negative of the panel's string to one channel and the positive to the positive pin of connector CN3. You'll find the voltage value on 30040.

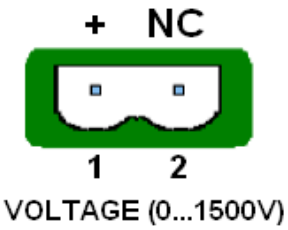

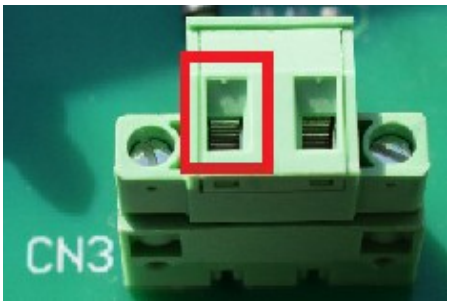

3.5 Connector : CN4

Is possible connect one PT100 to read the external temperature. The PT100 could be 2 or 3 wires, it will be connected in the following way to terminal block CN4. You can find this temperature on register 30044.

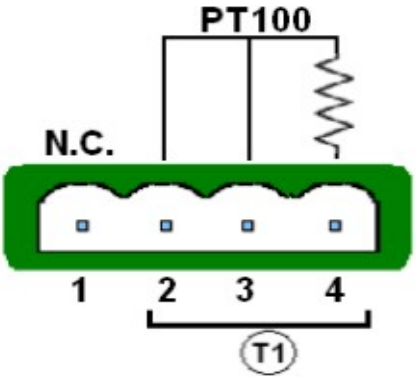

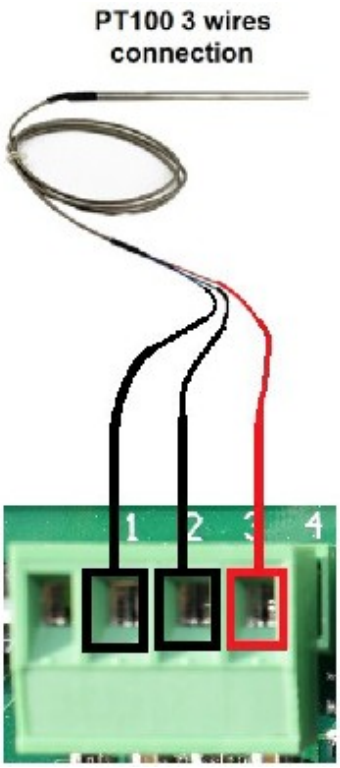

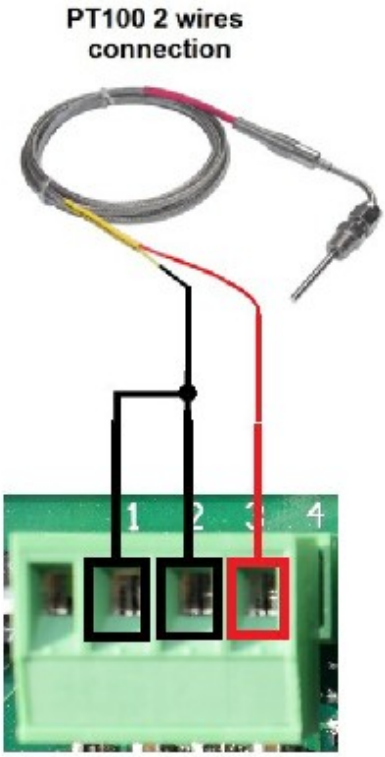

3.6 Connector : CN5

To know when a switch (for example the general one) is ON or OFF, there are four digital inputs PNP 24 Vdc on terminal block CN5. Each digital input status is indicated also by a led status on board. You need to use the pins 5, 6, 7, 8, 9 and 10. Inside the memory map the bits from 0 to 3 of register 30001 are the digital input status.

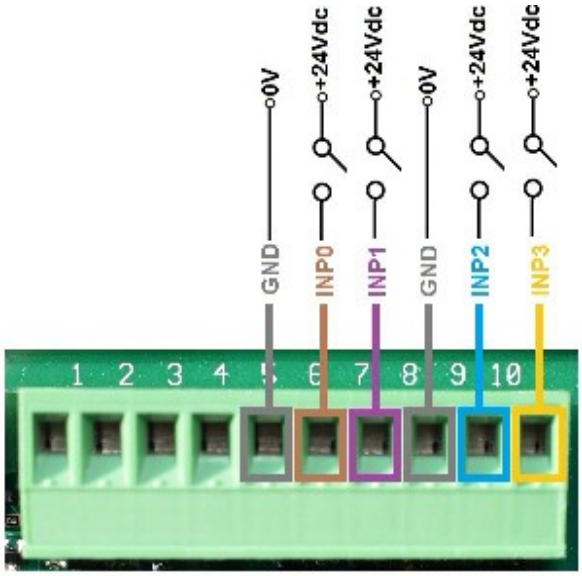

May be necessary connect a probe to a junction box, for example a pyrometer (to know the solar irradiation). To this purpose there are two analog inputs: one which allow to connect a signal which can be from 0 to 20 mA and the other one which allow to connect a signal from 0 to 10 Vdc. The connection is to pin 1, 2, 3 and 4 of terminal block CN5. On register 30042 and 30043 you can find a value between 0...1000 in order to the signal value (20 mA or 10 Vdc = 1000; 10 mA or 5 Vdc = 500; 0 mA or 0 Vdc = 0 etc…)

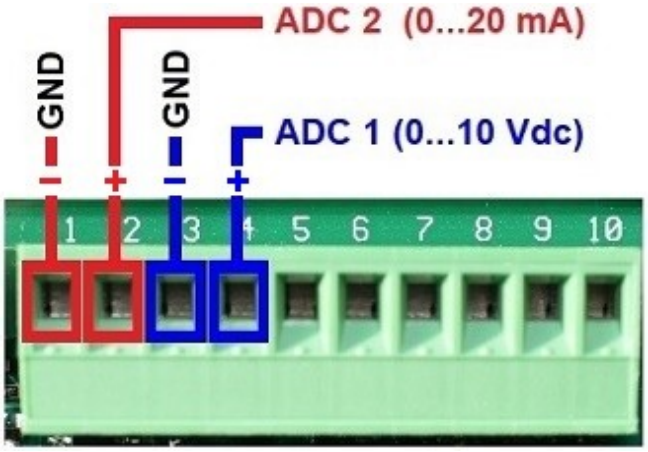

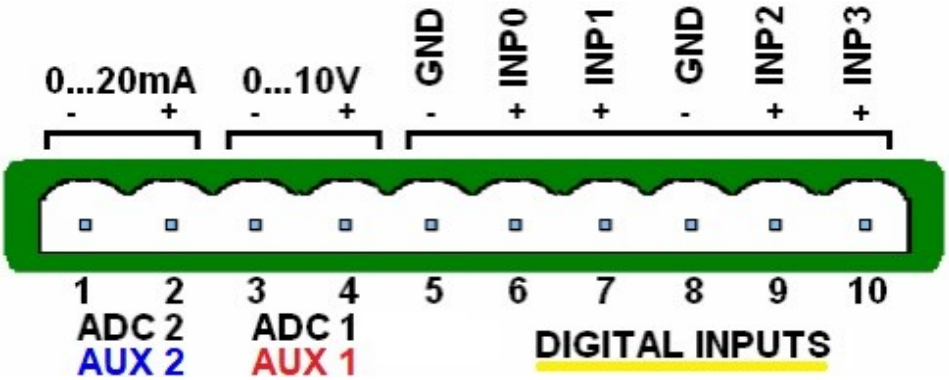

3.7 Board dimensions

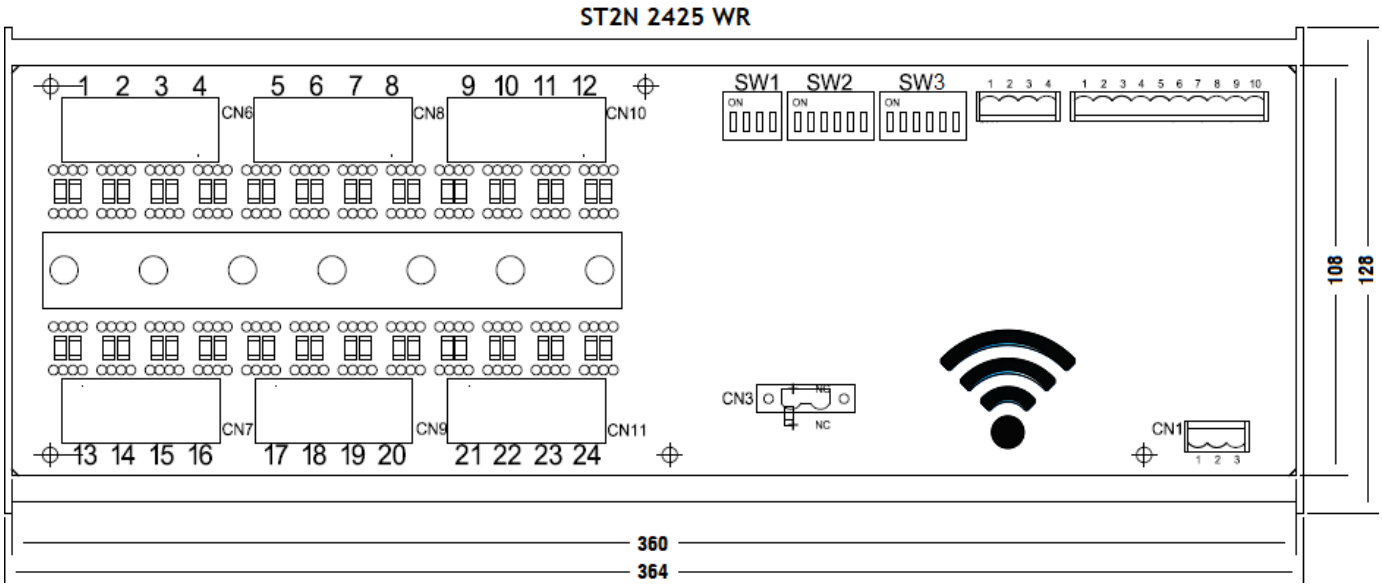

Size (naked)	360 x 108 mm
Size (with support for din rail bar)	364 x 128 mm

3.8 Connection Type : ST2N 2425Nx WRAD

The connection type is schematized here below :

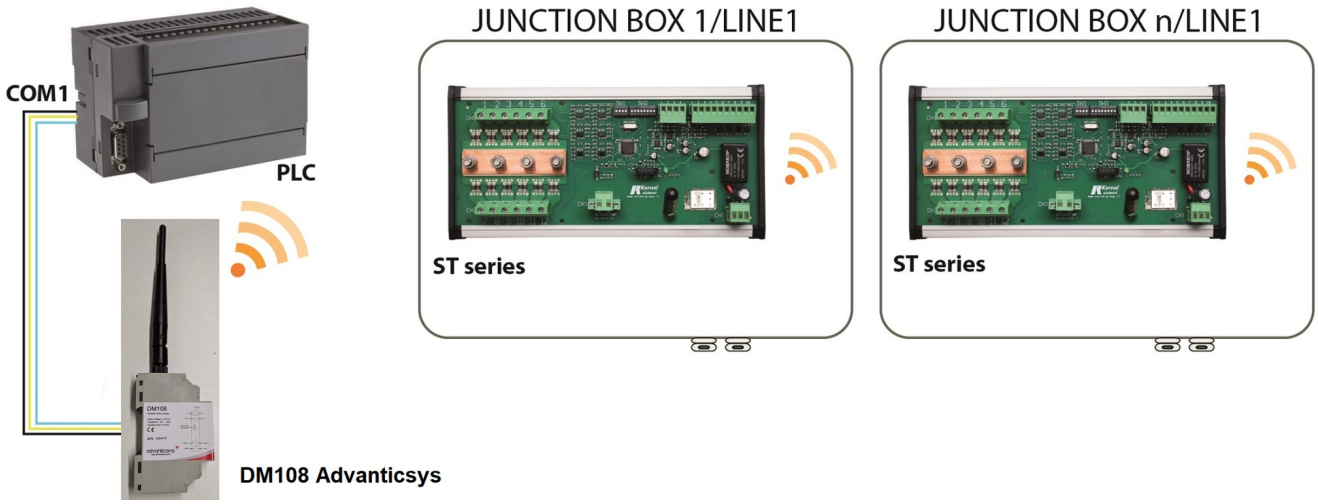

Protocol = Modbus RTU or IEC 60870-5-101

3.9 Busbar

Examples of busbar connection :

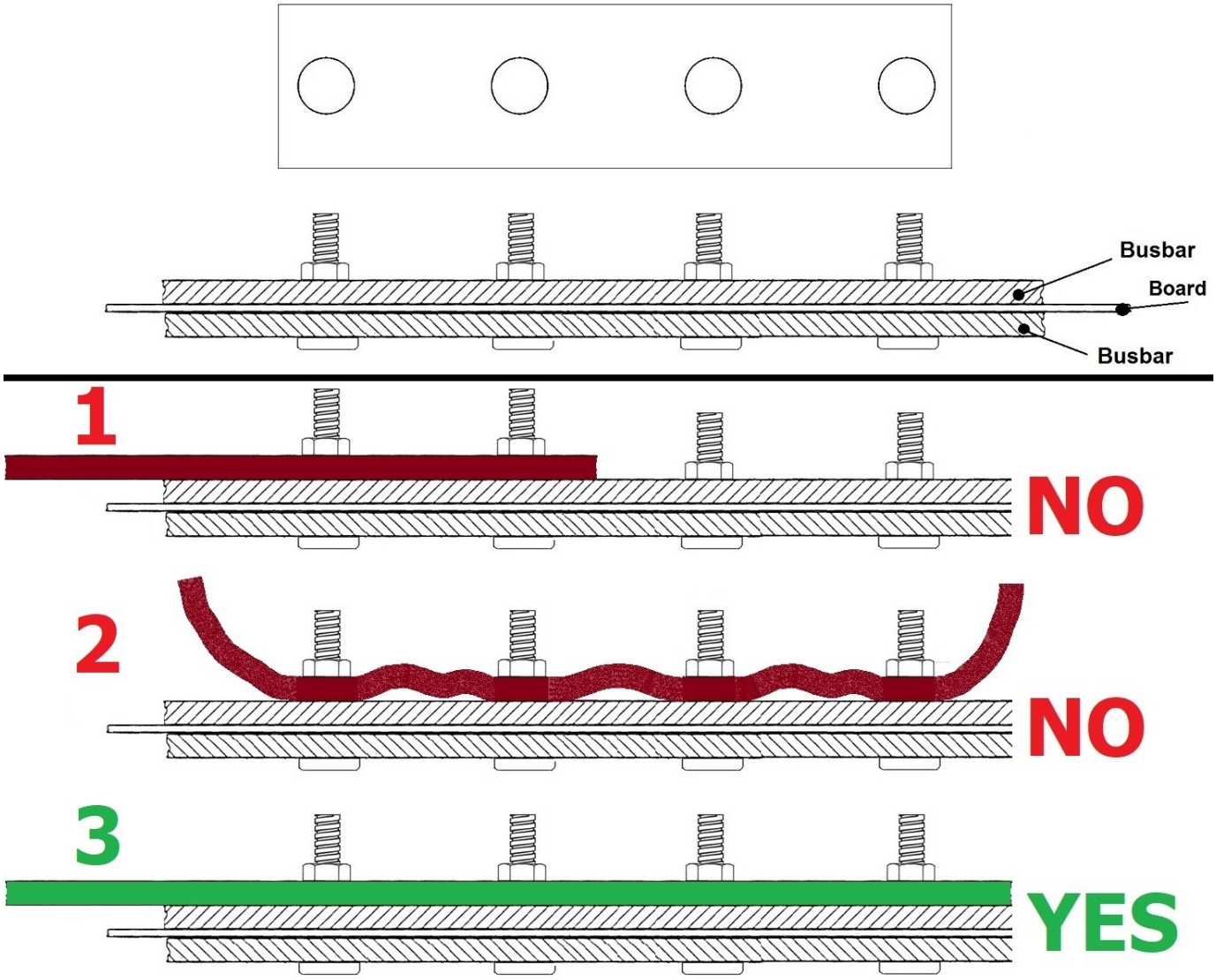

If it is necessary to "**extend**" the busbar, the following fundamental rules must be followed :

1. The added bar must take the whole bar and be connected to all the bolts (with the correct tightening torque).

2. It must not have curves or irregularities.

3. It must be absolutely flat so as to be perfectly in contact on the whole surface of the bar.
This connection busbar **MUST** be perfectly planar.
It is therefore necessary to check that these busbars are perfectly planar **BEFORE** fixing them to the busbar of the board.

It is necessary FIRST to fix the "busbar connection to the Switch Disconnector" to the BOARD, then perform the fastening of this busbar to the Switch Disconnector. In doing so, the perfect contact between the "busbar connection to the S.D." and the busbar on the board is guaranteed.

ATTENTION

The dimensions of the bar must be calculated according to the value of the **MAXIMUM CURRENT**
(follow the appropriate regulatory tables)
As an alternative to the bar, it is possible to connect more CABLES to the busbar on the board : also in this case the cables must be appropriately sized according to the value of the **MAXIMUM CURRENT**
(follow the appropriate regulatory tables).

Busbar dimensions : (n.2 BAR component side + n.1 BAR welding side)

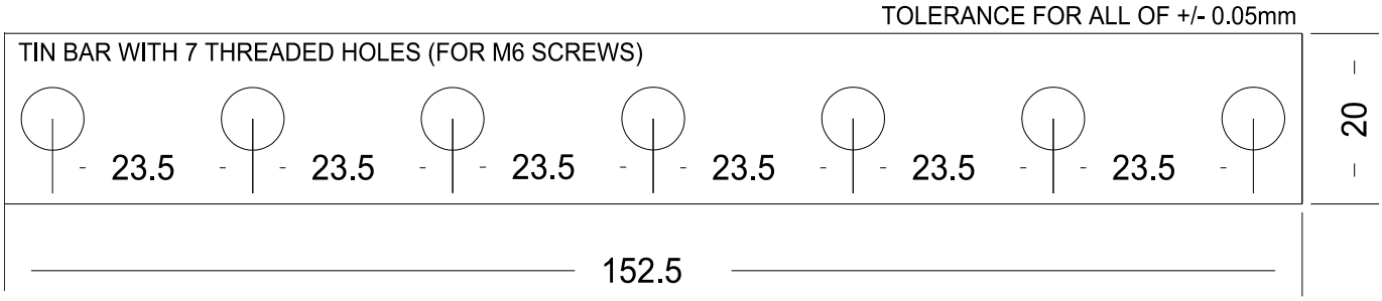

3.10 Dip-switches

Node Addressing

At the startup the SMU reads the node address from the DIP switch configuration [01..63] and assume that address. Moreover it configures the radio modem E_108 getting the configuration parameters from the DIP switches positions in this way :

- E_108 address = SMU address + 0x80

- E_108 group ID from the DIP 6 … 11 (64 groups available)

- E_108 radio channel from the DIP 12 … 15. There are **10** channels available :

```
From : CH 0 [ 0 0 0 0 ]
To   : CH 9 [ 1 0 0 1 ]
```

- E_108 coordinator = OFF

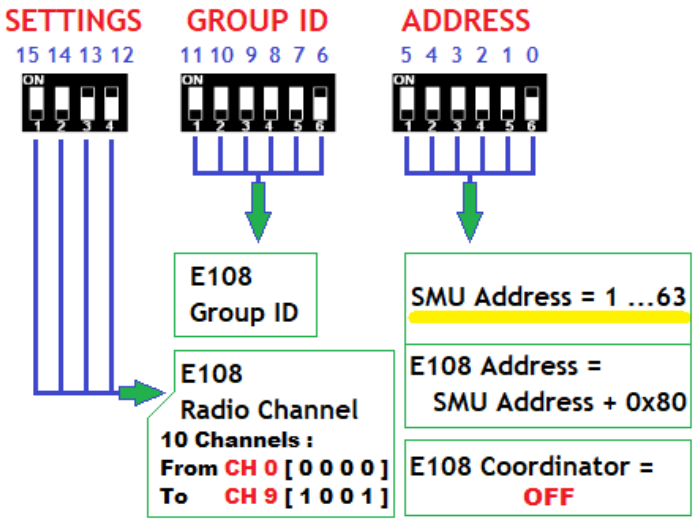

Radio Channel and Group ID

Talking as in electronics, these 2 parameters are like 2 multiplexers for the radio network deployment. First one (high priority) is Radio channel. All devices in the same network must have configured the same radio channel. So the radio channel parameters will be in charged of establish a radio network. There will be as much radio networks as different radio channels configured. On a lower priority, there is a possibility to, inside a radio network, make different sub-networks. This different sub-networks, will be defined by the group ID.

IMPORTANT

E108 module always is programmed to 19200 bauds. Don't change any UART parameters in E108.

3.11 Informations about wires and connectors

CHANNEL CONNECTOR	
Wire Section	16 mm²
Wire Stripping	Max 15 mm
Screw	M4
Max Torque	1.4 Nm [12.4 Lbf-In]
Clamp opening size	5.4 × 5.8 mm
Operating temperature	-40°C ÷ +130°C

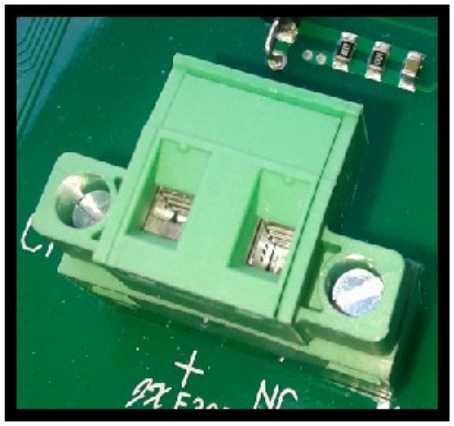

VOLTAGE CONNECTOR	
Wire Range	2.5 mm² / 0.20-2.5 mm²
Wire Strip length	7 mm
Conductor cross section AWG/kcmil	24 to 12
Screw	M3
Min / Max Torque	0.50 Nm / 0.60 Nm [4.4 Lbf-In / 5.3 Lbf-In]
Operating temperature	-40°C ÷ (depends on the derating curve)

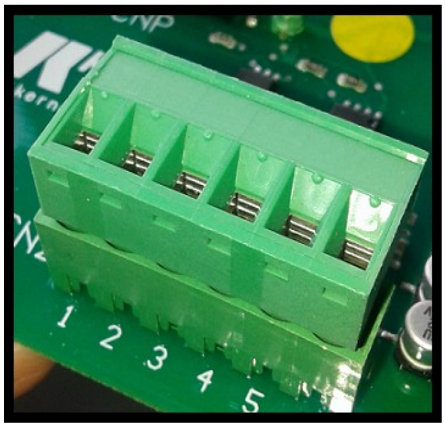

OTHER CONNECTORS (Power Supply ...)	
Wire Range	2.5 mm² / 0.34-2.5 mm²
Wire Strip length	7 - 8 mm
Solid Wire (AWG)	12-24 / 14-22
Screw	M3
Max Torque	0.56 Nm [5.0 Lbf-In]
Operating temperature	-40°C ÷ +115°C

Copper Bar	
Min / Max Torque	2.2 Nm / 2.5 Nm [19.5 Lbf-In / 22.1 Lbf-In]

3.12 Memory Protection

Memory is always protected by writing! In order to enable writing for a limited time (10 minutes), you have to write :

Value : 0x5555 Hex
Modbus Address : 40100

3.13 Fixing system of the naked board (without supporting box)

To fix the naked board (without case) is necessary use plastic spacers with dual clutch.
The plastic spacers must be 4x20 mm or 4x25 mm (4 mm is the hole diameter on the board).
Look the picture at right >>>

3.14 Status led

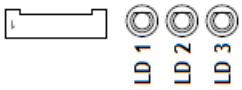

On the board there are 3 status led which with their blinking show the board status :

- **LD 1 = STATUS :** it blinks each second, it means that the board is ready to communicate
- **LD 2 = RX** : It turns ON when the SMU receives a valid and recognized command from the E_108 module
- **LD 3 = TX** : It turns ON when the SMU responds to a valid command just received from the E_108 module

IMPORTANT
At startup the 3 leds flash rapidly in sequence 3 times.
After that LD 2 and LD 3 HAVE TO BLINK 3 times for 1 sec ON and 1 sec OFF to signal successful connection with module E_108.

4 MEMORY MAP

The ST2N has the following memory map, it's made of 16 bits locations (1 word) called “REGISTER”. Because each REGISTER is composed by 16 bits, its maximum value will be 65535.

MODBUS Register	TYPE	DESCRIPTION
30001	RO	Inputs
30002	RO	Inst Curr Str_01 *(mA [0...25000])*
30003	RO	Inst Curr Str_02 *(mA [0...25000])*
30004	RO	Inst Curr Str_03 *(mA [0...25000])*
30005	RO	Inst Curr Str_04 *(mA [0...25000])*
30006	RO	Inst Curr Str_05 *(mA [0...25000])*
30007	RO	Inst Curr Str_06 *(mA [0...25000])*
30008	RO	Inst Curr Str_07 *(mA [0...25000])*
30009	RO	Inst Curr Str_08 *(mA [0...25000])*
30010	RO	Inst Curr Str_09 *(mA [0...25000])*
30011	RO	Inst Curr Str_10 *(mA [0...25000])*
30012	RO	Inst Curr Str_11 *(mA [0...25000])*
30013	RO	Inst Curr Str_12 *(mA [0...25000])*
30014	RO	Inst Curr Str_13 *(mA [0...25000])*
30015	RO	Inst Curr Str_14 *(mA [0...25000])*
30016	RO	Inst Curr Str_15 *(mA [0...25000])*
30017	RO	Inst Curr Str_16 *(mA [0...25000])*

MODBUS Register	TYPE	DESCRIPTION
30018	RO	Inst Curr Str_17 *(mA [0...25000])*
30019	RO	Inst Curr Str_18 *(mA [0...25000])*
30020	RO	Inst Curr Str_19 *(mA [0...25000])*
30021	RO	Inst Curr Str_20 *(mA [0...25000])*
30022	RO	Inst Curr Str_21 *(mA [0...25000])*
30023	RO	Inst Curr Str_22 *(mA [0...25000])*
30024	RO	Inst Curr Str_23 *(mA [0...25000])*
30025	RO	Inst Curr Str_24 *(mA [0...25000])*

...

30034	RO	Fuse status (Ch01...Ch16)
30035	RO	Fuse status (Ch17...Ch24)

...

30040	RO	Inst V_1 *(V [0...1500])*
30041	RO	Not used
30042	RO	Inst Aux 1 (0 ... 10 V) [0...1000]
30043	RO	Inst Aux 2 (0 ... 20 mA) [0...1000]
30044	RO	Inst T_1 *(°C [-20...+120]) - PT100*
30045	RO	Inst T_2 *(°C [-22,0...+83,0]) - on board*

...

30047	RO	Sum of all currents (A / 10)
30048	RO	Power (W) - LSW
30049	RO	Power (W) - MSW

...

30052	RO	RMS Curr Str_01 (average value on last 6 seconds)
30053	RO	RMS Curr Str_02 (average value on last 6 seconds)
30054	RO	RMS Curr Str_03 (average value on last 6 seconds)
30055	RO	RMS Curr Str_04 (average value on last 6 seconds)
30056	RO	RMS Curr Str_05 (average value on last 6 seconds)
30057	RO	RMS Curr Str_06 (average value on last 6 seconds)
30058	RO	RMS Curr Str_07 (average value on last 6 seconds)
30059	RO	RMS Curr Str_08 (average value on last 6 seconds)
30060	RO	RMS Curr Str_09 (average value on last 6 seconds)
30061	RO	RMS Curr Str_10 (average value on last 6 seconds)
30062	RO	RMS Curr Str_11 (average value on last 6 seconds)
30063	RO	RMS Curr Str_12 (average value on last 6 seconds)
30064	RO	RMS Curr Str_13 (average value on last 6 seconds)
30065	RO	RMS Curr Str_14 (average value on last 6 seconds)
30066	RO	RMS Curr Str_15 (average value on last 6 seconds)
30067	RO	RMS Curr Str_16 (average value on last 6 seconds)
30068	RO	RMS Curr Str_17 (average value on last 6 seconds)
30069	RO	RMS Curr Str_18 (average value on last 6 seconds)
30070	RO	RMS Curr Str_19 (average value on last 6 seconds)
30071	RO	RMS Curr Str_20 (average value on last 6 seconds)
30072	RO	RMS Curr Str_21 (average value on last 6 seconds)

30073	RO	RMS Curr Str_22 (average value on last 6 seconds)
30074	RO	RMS Curr Str_23 (average value on last 6 seconds)
30075	RO	RMS Curr Str_24 (average value on last 6 seconds)
...		
30084	RO	RMS V_1 *(V [0...1500])* (average value on last 6 seconds)
30085	RO	Not used
30086	RO	RMS Aux 1 (0 ... 10 V) [0...1000] (average value on last 6 seconds)
30087	RO	RMS Aux 2 (0 ... 20 mA) [0...1000] (average value on last 6 seconds)
30088	RO	RMS Inst T_1 *(°C [-20...+120])* (average value on last 6 seconds)
30089	RO	RMS Inst T_2 *(°C [-22,0...+83,0])* (average value on last 6 seconds)

...

30091	RO	RMS Sum of all currents (A / 10) (average value on last 6 seconds)
30092	RO	RMS Power (W) - LSW (average value on last 6 seconds)
30093	RO	RMS Power (W) - MSW (average value on last 6 seconds)

...

30201	RO	Firmware Version	READ ONLY
30202	RO	SMU Model	READ ONLY
30203	RO	Channels Number	READ ONLY
30204	RO	Shunt Type	READ ONLY
30205	RO	End Scale	READ ONLY
30206	RO	Reserved for Future Use	RFU
30207	RO	Reserved for Future Use	RFU
30208	RO	Reserved for Future Use	RFU
30209	RO	Reserved for Future Use	RFU
30210	RO	Reserved for Future Use	RFU
30211	RO	Unique ID code [0]	READ ONLY
30212	RO	Unique ID code [1]	READ ONLY
30213	RO	Unique ID code [2]	READ ONLY
30214	RO	Unique ID code [3]	READ ONLY
30215	RO	Unique ID code [4]	READ ONLY
30216	RO	Unique ID code [5]	READ ONLY

...

40001	RW	Set up PARITY mode : 1 = None ; 2 = Even ; 3 = Odd
40002	RW	Offset Curr Str_01
40003	RW	Offset Curr Str_02
40004	RW	Offset Curr Str_03
40005	RW	Offset Curr Str_04
40006	RW	Offset Curr Str_05
40007	RW	Offset Curr Str_06
40008	RW	Offset Curr Str_07
40009	RW	Offset Curr Str_08
40010	RW	Offset Curr Str_09
40011	RW	Offset Curr Str_10
40012	RW	Offset Curr Str_11

40001	RW	Set up PARITY mode : 1 = None ; 2 = Even ; 3 = Odd
40002	RW	Offset Curr Str_01
40003	RW	Offset Curr Str_02
40013	RW	Offset Curr Str_12
40014	RW	Offset Curr Str_13
40015	RW	Offset Curr Str_14
40016	RW	Offset Curr Str_15
40017	RW	Offset Curr Str_16
40018	RW	Offset Curr Str_17
40019	RW	Offset Curr Str_18
40020	RW	Offset Curr Str_19
40021	RW	Offset Curr Str_20
40022	RW	Offset Curr Str_21
40023	RW	Offset Curr Str_22
40024	RW	Offset Curr Str_23
40025	RW	Offset Curr Str_24

...

40034	RW	Answer Delay (msec)
40035	RW	Time Com Active (1/10 sec.)
40036	RW	Parity (1 = None, 2 = Even, 3 = Odd) = 40001
40037	RW	Fuse Threshold

...

40040	RW	Offset V_1
40041	RW	Not used
40042	RW	Offset Aux_1
40043	RW	Offset Aux_2
40044	RW	Offset T_1
40045	RW	Offset T_2
...		
40047	RW	Minimum Current (Default = 1 A)
40048	RW	Minimum Voltage (Default = 100 V)

...

40052	RW	Gain Curr Str_1
40053	RW	Gain Curr Str_2
40054	RW	Gain Curr Str_3
40055	RW	Gain Curr Str_4
40056	RW	Gain Curr Str_5
40057	RW	Gain Curr Str_6
40058	RW	Gain Curr Str_7
40059	RW	Gain Curr Str_8
40060	RW	Gain Curr Str_9
40061	RW	Gain Curr Str_10
40062	RW	Gain Curr Str_11
40063	RW	Gain Curr Str_12

40064	RW	Gain Curr Str_13
40065	RW	Gain Curr Str_14
40066	RW	Gain Curr Str_15
40067	RW	Gain Curr Str_16
40068	RW	Gain Curr Str_17
40069	RW	Gain Curr Str_18
40070	RW	Gain Curr Str_19
40071	RW	Gain Curr Str_20
40072	RW	Gain Curr Str_21
40073	RW	Gain Curr Str_22
40074	RW	Gain Curr Str_23
40075	RW	Gain Curr Str_24

...

40090	RW	Gain V_1
40091	RW	Not used
40092	RW	Gain Aux_1
40093	RW	Gain Aux_2
40094	RW	Gain T_1
40095	RW	Gain T_2

...

40101	RW	User Memory 01
40102	RW	User Memory 02
40103	RW	User Memory 03
40104	RW	User Memory 04
40105	RW	User Memory 05
40106	RW	User Memory 06
40107	RW	User Memory 07
40108	RW	User Memory 08

...

40201	RO	Shunt Type (= 30204)	READ ONLY
40202	RO	SMU Model (= 30202)	READ ONLY
40203	RO	Firmware Version (= 30201)	READ ONLY
40204	RO	Channels Number (= 30203)	READ ONLY
40205	RO	End Scale (= 30205)	READ ONLY
40206	RO	Reserved for Future Use	RFU
40207	RO	Reserved for Future Use	RFU
40208	RO	Reserved for Future Use	RFU
40209	RO	Reserved for Future Use	RFU
40210	RO	Unique ID code [0] (= 30211)	READ ONLY
40211	RO	Unique ID code [1] (= 30212)	READ ONLY
40212	RO	Unique ID code [2] (= 30213)	READ ONLY
40213	RO	Unique ID code [3] (= 30214)	READ ONLY
40214	RO	Unique ID code [4] (= 30215)	READ ONLY
40215	RO	Unique ID code [5] (= 30216)	READ ONLY

NOTES

Each "Offset Register" has 0 as default value. Each "Gain Register" has 1000 as default value. *The value 1000 means **x1***, in this way, for example, is possible write 500 and make the value **x0,5.**

4.1 Memory Map Description

30001 : the first four bits of these register are the mirror status of the four digital inputs on the board (INP0 ... INP3 on CN5). So if 30001 = 0000000000001111 [bin] = 15 [dec], it means that all the four digital inputs are ON.

30002 ... 30025 : these registers contains the current value of the current reading on each channel. It is in mA

30034, 30035 : the sixteen bits of 30034 and the first eight bits of 30035 show if each channel current reading is under 200 mA or not. This threshold represent the fuse status.

30040 … 30049 : these registers show the value of some readings as the temperatures (T1 and T2), voltage reading (on connector CN3) etc…

30052 ... 30075 : these registers contains the average value on last 6 seconds of the current reading. Obviously these values are more stable than the instantaneous values show in registers 30002 … 30025

40001 : through this register is possible set the communication parity. The default value is zero, so "no parity"

40002 ... 40025 : these are the offset registers. These registers (whose default value is 0) allow to add a constant value to the current reading. This allow to adjust a possible reading error. For example if 30002 show 2300 (it means that channel CH1 read 2,3A), writing 40002 = 200 the new value of the reading will be 30002 = 2500 (it means that channel CH1 read 2,5A).

40052 ... 40075 : these are the gain registers. These registers (whose default value is 1000) allow to multiply a constant value to the current reading. This allow to adjust a possible reading error. For example if 30002 show 2300 (it means that channel CH1 read 2,3A), writing 40052 = 1500 the new value of the reading will be 30002 = 3450 (it means that channel CH1 read 3,45A, 2300 x 1,5 =3450).

40101 ... 40108 : these are 8 registers available to the user. They can contain data useful to the customer, for example a different progressive number for each board.

40201 : Shunt Type (= 30204) – READ ONLY

40202 : SMU Model (= 30202) – READ ONLY

40203 : Firmware Version (= 30201) – READ ONLY

40204 : Channels Number (= 30203) – READ ONLY

40205 : End Scale (= 30205) – READ ONLY

40206 ... 40209 : Not Used - Reserved for Future Use (RFU)

40210 ... 40215 : **Unique device ID register (96 bits)** (organized in six 16 bit words) that is unique for any board.
(= 30211 **...** 30216) – READ ONLY

The unique device identifier is ideally suited :

- for use as serial numbers (for example string serial numbers or other end applications).
- for use as part of the security keys in order to increase the security.

The 96-bit unique device identifier provides a reference number which is unique for any device and in any context. These bits cannot be altered by the user. The code is composed of the following parts :

```
UID [31:00] : X and Y coordinates on the wafer expressed in BCD format
UID [39:32] : WAF_NUM [07:00] > Wafer number (8-bit unsigned number)
UID [63:40] : LOT_NUM [23:00] > Lot number (ASCII encoded)
UID [95:64] : LOT_NUM [55:24] > Lot number (ASCII encoded)
```

5 ORDER CODES

Here below the order codes :

CODE	WIRELESS	DESCRIPTION
ST2N 2425NC / WR	Wireless Option	Device with support for din rail bar
ST2N 2425NK / WR	Wireless Option	Device without support for din rail bar
ST2N 2425NC / WRAD	Wireless E-108	Device with support for din rail bar
ST2N 2425NK / WRAD	Wireless E-108	Device without support for din rail bar
ST2N 2425NC / WRLR01	Wireless Hoperf 868 MHz	Device with support for din rail bar
ST2N 2425NK / WRLR01	Wireless Hoperf 868 MHz	Device without support for din rail bar

6 CONTACTS

GENERAL
Tel: 059 469978 website: www.kernelgroup.it e-mail: info@kernelgroup.it

COMMERCIAL
Sig.ra Linda Mammi Tel: 059 469978 Int. 207 e-mail: sales@kernelgroup.it Skype: mammi.kernel

ADMINISTRATION
Sig.ra Paola Morandi Tel: 059 469978 Int. 201 e-mail: amministrazione@kernelgroup.it Skype: morandi.kernel

PURCHASING and PRODUCTION
Sig. Stefano Catuogno Tel: 059 469978 Int. 204 e-mail: produzione@kernelgroup.it Skype: catuogno.kernel

TECHNICAL OFFICE
Sig. Alessandro Muratori Tel: 059 469978 Int. 205 e-mail: alessandro.muratori@kernelgroup.it Skype: muratori.kernel
Support Tel: 059 469978 Int. 209 e-mail: support@kernelgroup.it Skype: support.kernel
Sig. Morisi Luca e-mail: luca.morisi@kernelgroup.it Skype: morisi.kernel

Kernel Sistemi s.r.l. , via Vignolese n. 1138
41126 Modena - ITALY
Tel. 059 469 978 - Fax 059 468 874
www.kernelgroup.it