ST0HS 1660Nx\SR
ST0HS 1660Nx\DR

DATA SHEET

rev. 1.7
06 June 2022

Kernel Sistemi
Kernel Sistemi s.r.l. , via Vignolese n. 1138
41126 Modena - ITALY
Tel. 059 469 978 - Fax 059 468 874
www.kernelgroup.it

INDEX

1 SAFETY....3

2 GENERAL NOTES....4

2.1 Introduction....4

3 HARDWARE CHARACTERISTICS....5

3.1 Hardware Characteristics....5
3.2 Board Dimensions....6
3.3 Connectors....6
3.4 Connector : CN1....7
3.5 Connector : CN3....7
3.6 Connector : CN4....7
3.7 Memory Protection....7
3.8 Dip-switches....8
3.9 Fixing system of the naked board (without supporting box)....8
3.10 Status led....8
3.11 Positive Current Values....9
3.12 Informations about wires and connectors....9
3.13 Connection Types....10
3.14 Reading speed....11
3.15 Scada – PLC....12

4 MEMORY MAP....12

4.1 Memory Map Description....16

5 OPTICAL FIBER....17

5.1 OFC Network features....17
5.2 Optical Fiber Cable....17
5.3 Optical Fiber Connector....18

6 ORDER CODES....18

7 CONTACTS....19

Attention

The information contained in this document may change without notice.
*Therefore, please check our website (**www.kernelgroup.it**) regularly and always download the latest version available.*

1 SAFETY

This product is a String Monitoring System (SMU) and its application is the monitoring of photovoltaic systems. From an electrical point of view, by their nature, photovoltaic systems operate in direct current and with very high voltage and current values.

Safety : General Conditions		
	DANGER	- This product is therefore designed to operate with direct current voltage values up to 1500 VDC. This voltage value is potentially fatal. Voltage values between 24 VDC and 1500 VDC are therefore present on this product.

Safety : Installation and replacement precautions		
	DANGER	- The installation and / or replacement of this product must take place in absolute safety, therefore it is necessary to proceed with the installation and / or replacement of this product which is housed inside the field panel after disconnecting the power and dangerous voltages from solar panels. - In any case, any intervention involving the handling of the SMU must be carried out by skilled and trained technicians equipped with insulation gloves designed for voltage values up to 1500 VDC and after disconnecting any voltage and current from the solar panels.

Important Safety Instructions		
	DANGER	- Contact with wiring terminals inside the device can cause death by electric shock!
	WARNING	- Please check all input and output wire terminals in case of high DC voltage and make sure there is no voltage before electrical connection to avoid electric shock! - Do not touch the live parts of the input and output sides to avoid electric shock when checking or maintaining the device. - All installation and wiring connections must be made by qualified technical personnel only.
	CAUTION	- All wiring and operation must comply with the requirements of the relevant local standards of the device. - Check the device and make sure there are no problems with the installation before putting it into operation! - Connect the wires to the positive and negative marked positions of the device to avoid the risk of short circuit, ensure personal safety and keep the device in normal operation.
	IMPORTANT	**Reference to current standards** For any other consideration, safety precaution, it is absolutely necessary, before carrying out any installation and / or replacement of the SMU, to refer to the regulations in force regarding the construction of combiner boxes.

2 GENERAL NOTES

2.1 Introduction

The ST0HS module to string control, allow to monitoring current and voltage generated by photovoltaic panels strings.
When the current will be measured goes through a sensor, the voltage will be measured at the output end.

The ST0HS board also provides two digital inputs and an on-board sensor which allow to measure the temperature.
The digital inputs allows to detect the arrester state and the power disconnector switch state.

Is possible communicate with the ST0HS board through a Fiber Optic connection. Using **Modbus RTU protocol**, or with **IEC 60870-5-101 protocol**, is possible monitoring all the physical quantities measured (temperature, currents, voltage). Moreover is possible keep monitored the fuses status on the string box, through the reading of an internal register on memory map (30034).

In the following image there are the "ST0HS string controller" with all the wiring. Obviously isn't necessary connect all the specified devices, they are indicated to give a connection general idea.

ST0HS1660Nx\DR

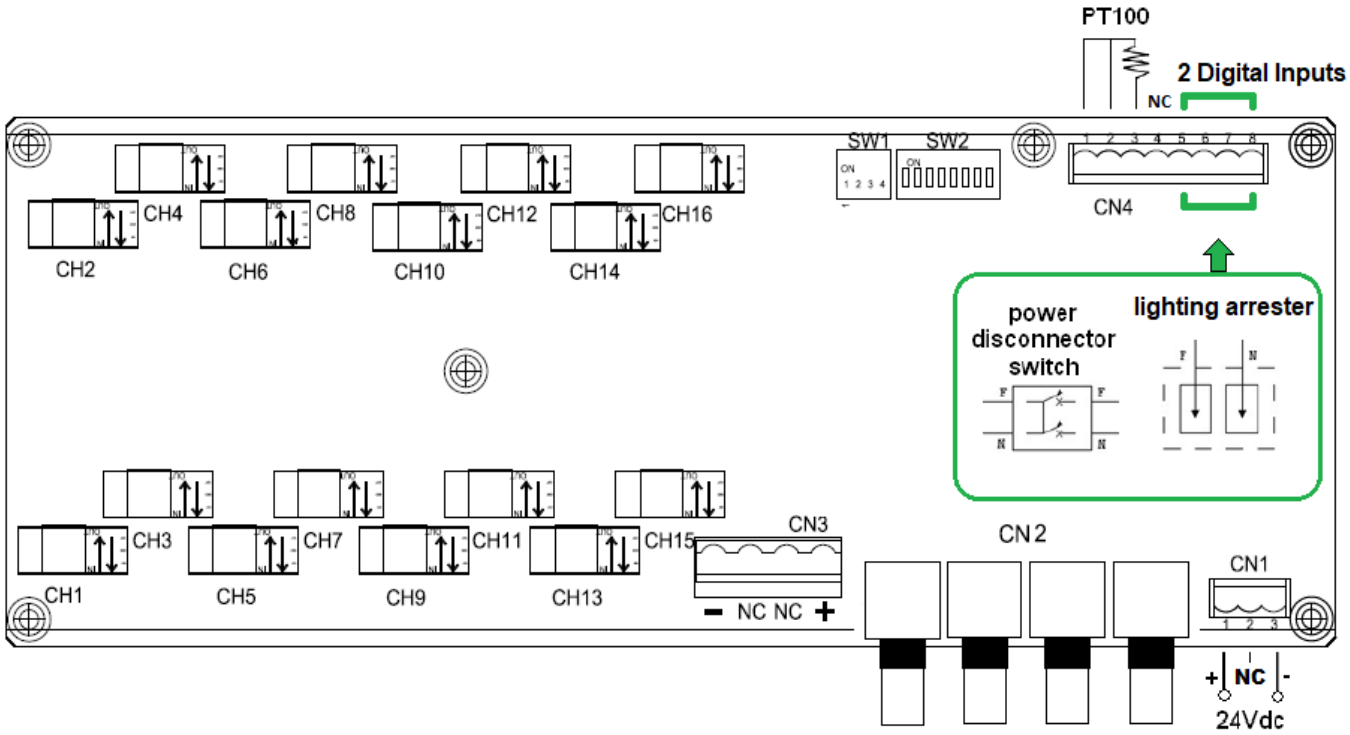

3 HARDWARE CHARACTERISTICS

3.1 Hardware Characteristics

ELECTRIC CHARACTERISTICS		
Microprocessor	STM32F303	
Power supply	24 Vdc	
Power consumption (W)	< 3 W	
Maximum number of monitored strings	16	
Maximum common voltage	1500 V with precision better than 0,5 %	
Max. current for each string	60 A	
Range of measurement	0 ... 960 A	
Current reading accuracy	Better than 0,3 %	
Current reading precision	Better than 1,0 %	
Communication	Fiber Optic	
Digital Inputs	2 digital inputs 24 Vdc PNP	
Analog inputs	1 input PT100 + 1 on board temperature sensor to know the temperature inside the string box panel	
Working temperature's range	From -40 to +85 °C	
Working atmosphere	Without corrosive gas	
ID Address	Defined by dip-switches	
Size (naked)	280 x 108 mm	
Size (with support for din rail bar)	284 x 128 mm	
Working humidity	Lower 95 % without condensation	
MTBF	> 500000 hours	
Maximum Operating Altitude	4000 meters	
Minimum Current	1 A (programmable)	from Firmware Version : **1.31** forward
Minimum Voltage	100 V (programmable)	

N°	Type of resources	Symbol	Terminal Block
1	Sensor on board to read the temperature (precision better than 1,5 %)	**T2**	**On board**
1	Fiber Optic connection : is used to connect many "ST0HS string controllers" into a network or to a PC. Is possible select the communication characteristics with some dip-switches on board (node address, baud rate, parity, and communication protocol, that may be **Modbus RTU or IEC 60870-5-101**). It's divided in 2 connectors (Single Ring) or 4 connectors (Double Ring)	**FIBER OPTIC**	**CN2**
1	PT100 input (from -20 to +120 °C) to temperature reading, with precision better than 1,5 %	**T1**	**CN4**
2	PNP digital inputs 24 Vdc, typically used to arrester connection, switches or other devices	**INP0, INP1**	**CN4**
16	This board can manage the current reading of 16 strings until 60 A with typical precision of 1.0 % and a temperature between -40 and +85 °C	**Ch1...Ch16**	**Hall Sensors**

3.2 Board Dimensions

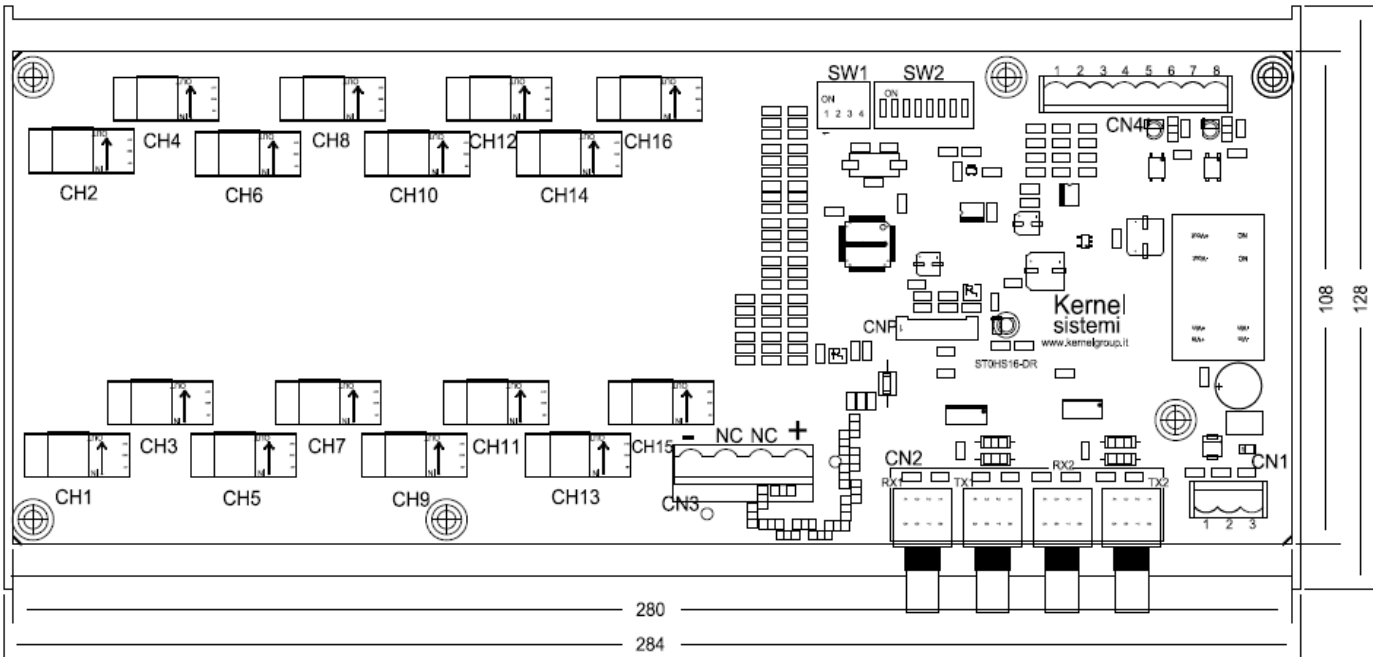

3.3 Connectors

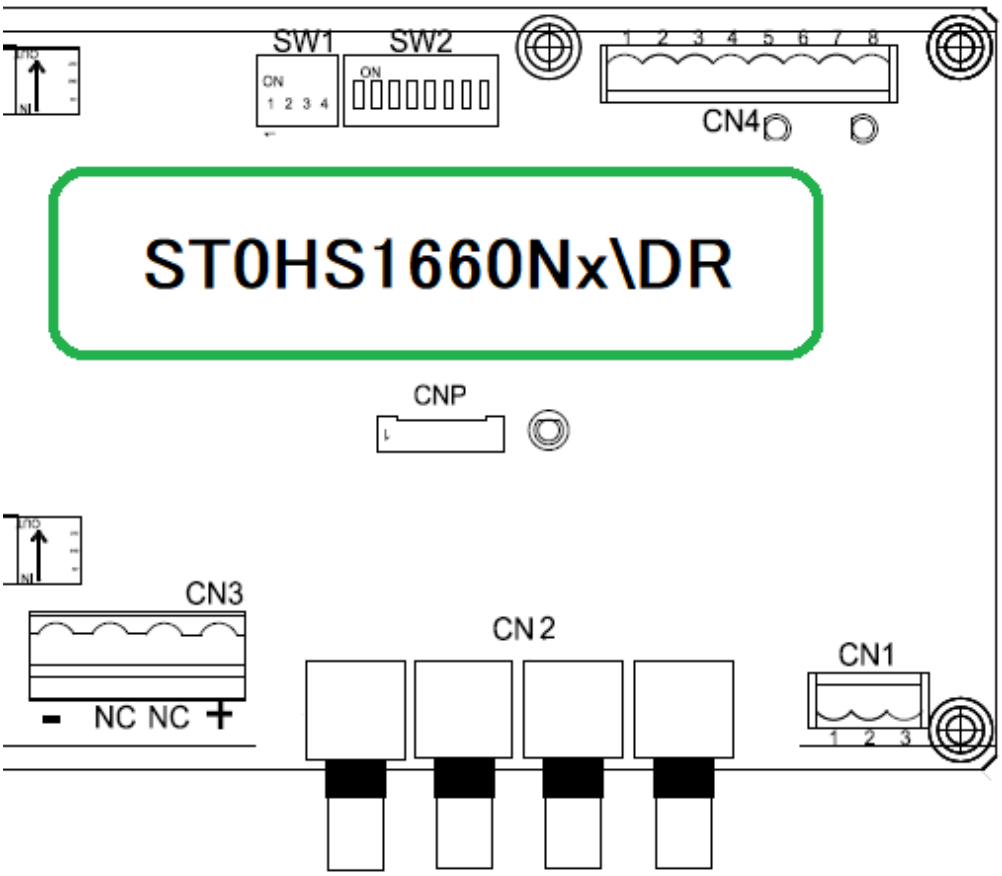

3.4 Connector : CN1

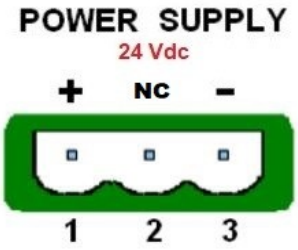

3.5 Connector : CN3

To read the voltages, is necessary connect the negative cable to pin "-" and the positive cable to the pin "+" of connector **CN3**. You'll find the voltage value on **30040** (instant value) or **30084** (average value on last 6 seconds).

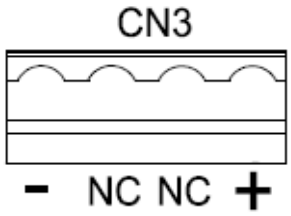

3.6 Connector : CN4

To know when a switch (for example the general one) is ON or OFF, there are two digital inputs PNP 24 Vdc on terminal block CN4. Each digital input status is indicated also by a led status on board. You need to use the pins 5, 6, 7 and 8. Inside the memory map the bits from 0 to 1 of register 30001 are the digital input status.

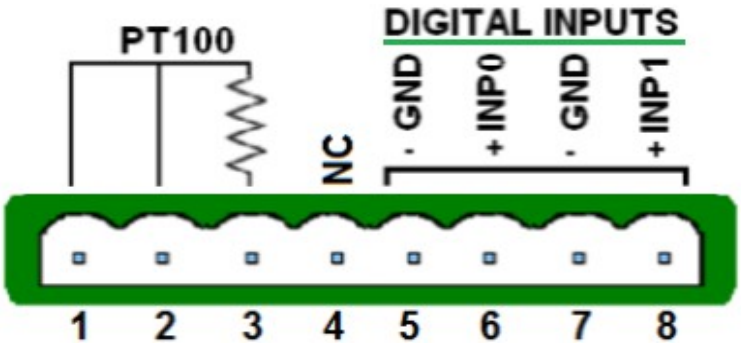

Is possible connect one PT100 to read the external temperature. The PT100 could be 2 or 3 wires, it will be connected as shown in the figure above to terminal block CN4. You can find this temperature on register 30044.

3.7 Memory Protection

Memory is always protected by writing! In order to enable writing for a limited time (10 minutes), you have to write :

Value : 0x5555 Hex
Modbus Register : 40100

3.8 Dip-switches

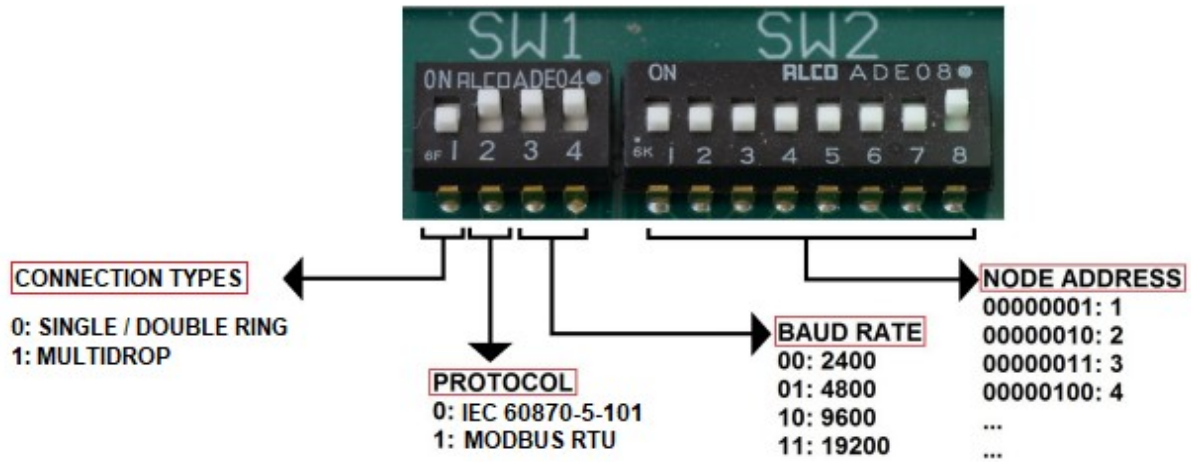

Note : Parity = NO_PARITY ; Bit = 8 ; Stop = 1

Some dip-switches examples :

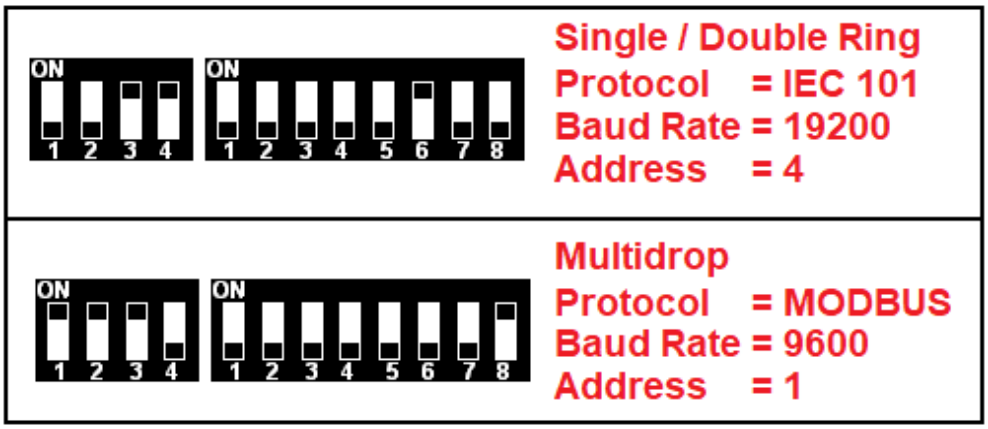

3.9 Fixing system of the naked board (without supporting box)

To fix the naked board (without case) is necessary use plastic spacers with dual clutch.
The plastic spacers must be 4x20 mm or 4x25 mm (4 mm is the hole diameter on the board).
Look the below picture.

3.10 Status led

On the board there is a status led which with its blinking show the board status.
There are two possible different blinking ways : blinking each 0,5 sec, or blinking faster. If the blinking is 0,5 sec ON and 0,5 sec OFF, it means that the board is ready to communicate with an external device, instead if the blinking is faster than 0,5 sec, it means that the board is in test mode with all the dip-switch OFF. In this way the board isn't ready to communicate with an external device.

3.11 Positive Current Values

IMPORTANT

To have **POSITIVE CURRENT VALUES**, you must insert the cables into the Hall sensors in one of the following ways :

IF YOU USE THE "+" [POSITIVE] CABLE
Insert the cable from the BOTTOM to the TOP :

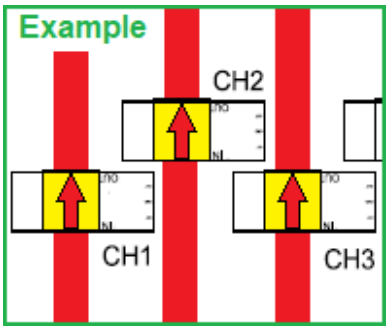

IF YOU USE THE "-" [NEGATIVE] CABLE
Insert the cable from the TOP to the BOTTOM :

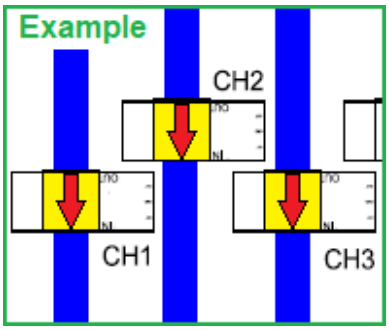

IMPORTANT

3.12 Informations about wires and connectors

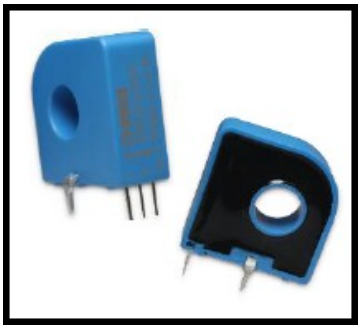

CURRENT SENSOR	
Max Wire Section	10 mm²
Operating temperature	-40°C ÷ +105°C

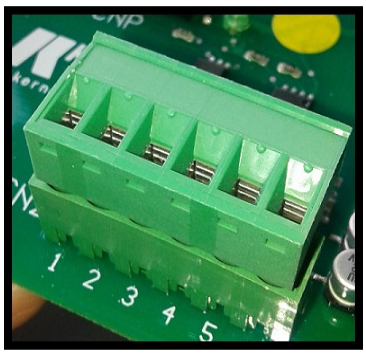

OTHER CONNECTORS (Power Supply ...)	
Wire Range	2.5 mm² / 0.34-2.5 mm²
Wire Strip length	7 - 8 mm
Solid Wire (AWG)	12-24 / 14-22
Screw	M3
Max Torque	0.56 Nm [5.0 Lbf-In]
Operating temperature	-40°C ÷ +115°C

VOLTAGE CONNECTOR	
Wire Section	2.5 mm² / 0.20-2.5 mm²
Stripping length	7 mm
Conductor cross section AWG/kcmil	24 to 12
Screw	M3
Min / Max Torque	0.50 Nm / 0.60 Nm [4.4 Lbf-In / 5.3 Lbf-In]
Operating temperature	-40°C ÷ (depends on the derating curve)

3.13 Connection Types

Is possible connect ST0HS with 3 different configurations as below! The 3 types are the following :

1. **"Single Ring or Single Connection"**
2. **"Double Ring or Double Connection" [Redundant]**
3. **"Multidrop Connection" [Redundant]**

The final result is as schematized here below :

SINGLE RING / SINGLE CONNECTION

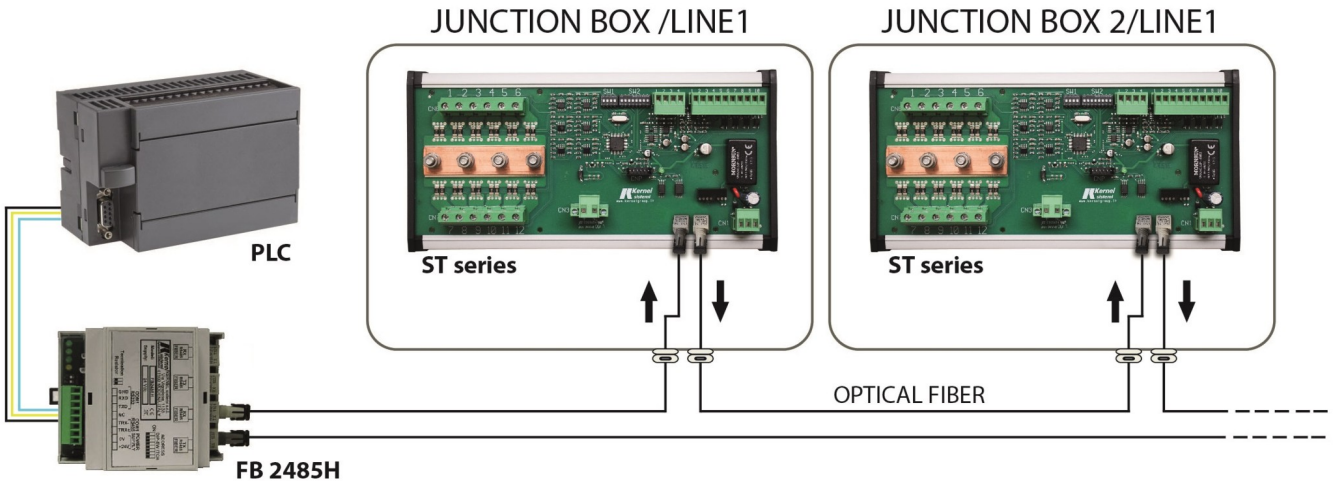

Protocol = MODBUS or IEC 60870-5-101

DOUBLE RING / DOUBLE CONNECTION [REDUNDANT]

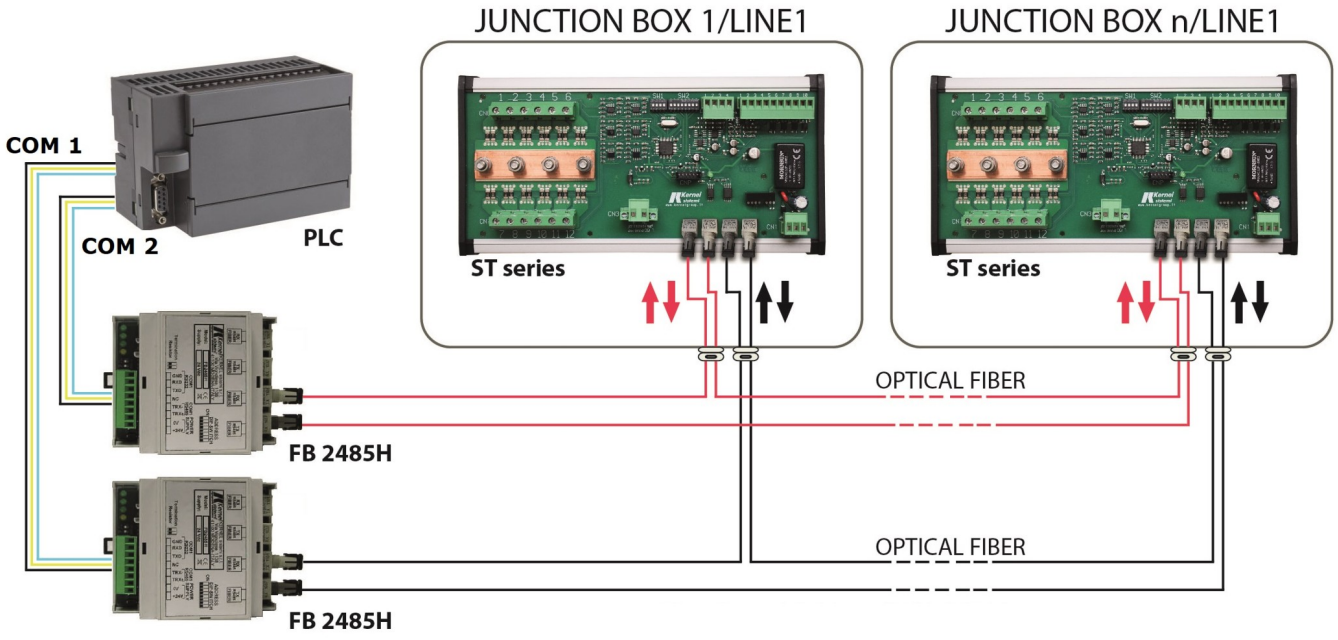

Protocol = MODBUS or IEC 60870-5-101

MULTIDROP CONNECTION [REDUNDANT]

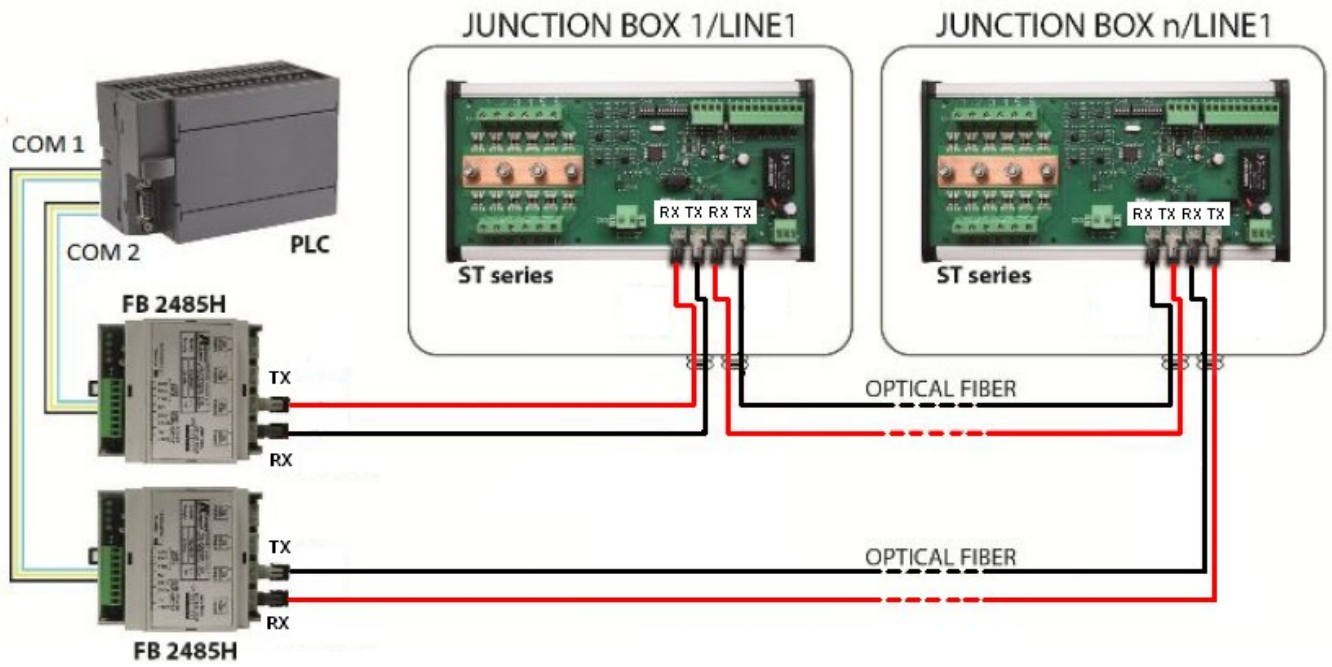

Protocol = MODBUS or IEC 60870-5-101

3.14 Reading speed

The analogic values of the currents, the voltage and the temperature are read simultaneously 10 times per second (100 msec scan time), then are inserted in it's own FIFO (a FIFO for each analogic value), 16 values deep. The value read from the board is the mobile mean of the FIFO, so it is the mean of the last 16 read values (1.6 sec), updated every 100 msec. This is done to make the analogic readout more stable and it is a good compromise between speed and readout stability.
The instant values of the analogic are temporary stored into a hidden memory area, not accessible to the COM port.
The update time depend on the speed polling time of the SCADA and the communication baud rate.
The total time requested to read the board via com port is splitted into three times: *the query time*, *the latency time* and *the response time*.

The query time is the time needed by the SCADA to send the MODBUS query packet and depends on the baud rate (about 4 msec at 19200 baud rate).
The latency time is the time need by the board to process the query and prepare the answer, it is between 1 and 2 msec and it is independent on the baud rate.
The response time is the time needed byte the board to send the MODBUS answer packet, it's depend on the baud rate and on the number of registers read at a time, for a single register read at 19200 baud it is about 4 msec.
So at 19200 baud rate the total time needed to read a single register is about 10 msec., you have to add 1 msec every other register read, for example to read 16 registers with a single query will take 10 msec + 15 * 1 msec = 25 msec.

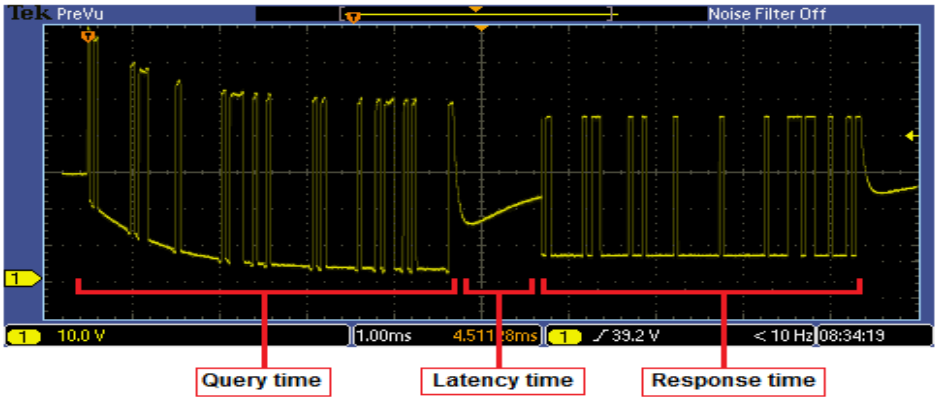

3.15 Scada – PLC

Typically the PLC communicates via Modbus TCP / IP protocol with the SCADA in the control room with Ethernet or fiber optic or wireless connection.

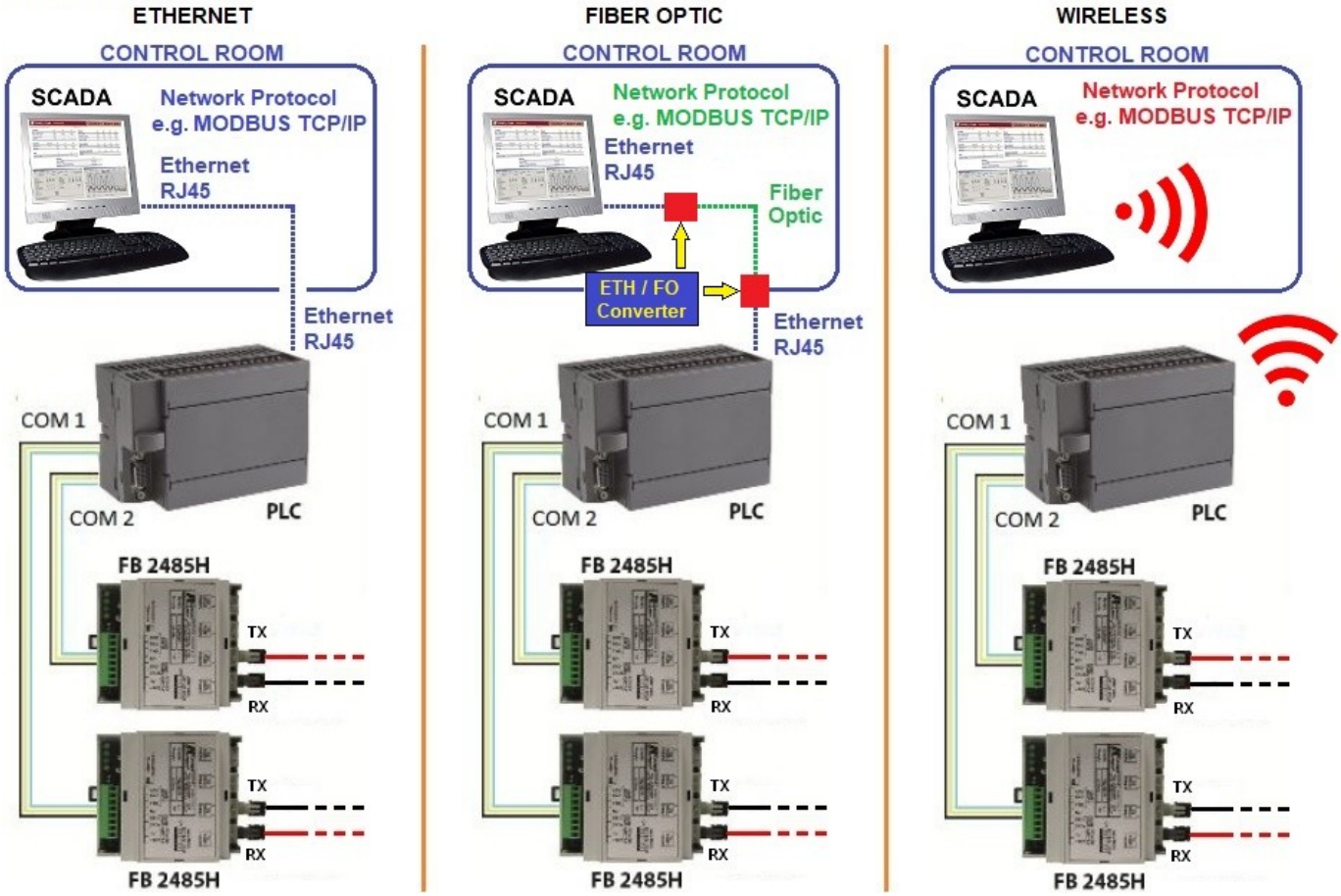

4 MEMORY MAP

The ST0HS has the following memory map, it's made of 16 bits locations (1 word) called “REGISTER”. Because each REGISTER is composed by 16 bits, its maximum value will be 65535.

MODBUS Register	TYPE	DESCRIPTION
30001	**RO**	Inputs
30002	**RO**	Inst Curr Str_01 *(mA [0...60000])*
30003	**RO**	Inst Curr Str_02 *(mA [0...60000])*
30004	**RO**	Inst Curr Str_03 *(mA [0...60000])*
30005	**RO**	Inst Curr Str_04 *(mA [0...60000])*
30006	**RO**	Inst Curr Str_05 *(mA [0...60000])*
30007	**RO**	Inst Curr Str_06 *(mA [0...60000])*
30008	**RO**	Inst Curr Str_07 *(mA [0...60000])*
30009	**RO**	Inst Curr Str_08 *(mA [0...60000])*
30010	**RO**	Inst Curr Str_09 *(mA [0...60000])*
30011	**RO**	Inst Curr Str_10 *(mA [0...60000])*
30012	**RO**	Inst Curr Str_11 *(mA [0...60000])*

30013	**RO**	Inst Curr Str_12 *(mA [0...60000])*
30014	**RO**	Inst Curr Str_13 *(mA [0...60000])*
30015	**RO**	Inst Curr Str_14 *(mA [0...60000])*
30016	**RO**	Inst Curr Str_15 *(mA [0...60000])*
30017	**RO**	Inst Curr Str_16 *(mA [0...60000])*

...

30034	**RO**	Fuse status (Ch01...Ch16)

...

30040	**RO**	Inst V_1 *(V [0...1500])*

...

30044	**RO**	Inst T_1 *(°C [-20...+120]) - PT100*
30045	**RO**	Inst T_2 *(°C [-22,0...+83,0]) - on board*

...

30047	**RO**	Sum of all currents (A / 10)
30048	**RO**	Power (W) - LSW
30049	**RO**	Power (W) - MSW

...

30052	**RO**	RMS Curr Str_01 (average value on last 6 seconds)
30053	**RO**	RMS Curr Str_02 (average value on last 6 seconds)
30054	**RO**	RMS Curr Str_03 (average value on last 6 seconds)
30055	**RO**	RMS Curr Str_04 (average value on last 6 seconds)
30056	**RO**	RMS Curr Str_05 (average value on last 6 seconds)
30057	**RO**	RMS Curr Str_06 (average value on last 6 seconds)
30058	**RO**	RMS Curr Str_07 (average value on last 6 seconds)
30059	**RO**	RMS Curr Str_08 (average value on last 6 seconds)
30060	**RO**	RMS Curr Str_09 (average value on last 6 seconds)
30061	**RO**	RMS Curr Str_10 (average value on last 6 seconds)
30062	**RO**	RMS Curr Str_11 (average value on last 6 seconds)
30063	**RO**	RMS Curr Str_12 (average value on last 6 seconds)
30064	**RO**	RMS Curr Str_13 (average value on last 6 seconds)
30065	**RO**	RMS Curr Str_14 (average value on last 6 seconds)
30066	**RO**	RMS Curr Str_15 (average value on last 6 seconds)
30067	**RO**	RMS Curr Str_16 (average value on last 6 seconds)

...

30084	**RO**	RMS V_1 *(V [0...1500])* (average value on last 6 seconds)

...

30088	**RO**	RMS T_1 *(°C [-20...+120])* (average value on last 6 seconds)
30089	**RO**	RMS T_2 *(°C [-22,0...+83,0])* (average value on last 6 seconds)

...

30091	**RO**	RMS Sum of all currents (A / 10) (average value on last 6 seconds)
30092	**RO**	RMS Power (W) - LSW (average value on last 6 seconds)
30093	**RO**	RMS Power (W) - MSW (average value on last 6 seconds)

...

30201	**RO**	Firmware Version	**READ ONLY**

30202	RO	SMU Model	READ ONLY
30203	RO	Channels Number	READ ONLY
30204	RO	Shunt Type	READ ONLY
30205	RO	End Scale	READ ONLY
30206	RO	Reserved for Future Use	RFU
30207	RO	Reserved for Future Use	RFU
30208	RO	Reserved for Future Use	RFU
30209	RO	Reserved for Future Use	RFU
30210	RO	Reserved for Future Use	RFU
30211	RO	Unique ID code [0]	READ ONLY
30212	RO	Unique ID code [1]	READ ONLY
30213	RO	Unique ID code [2]	READ ONLY
30214	RO	Unique ID code [3]	READ ONLY
30215	RO	Unique ID code [4]	READ ONLY
30216	RO	Unique ID code [5]	READ ONLY

...

40001	RW	Set up PARITY mode : 1 = None ; 2 = Even ; 3 = Odd
40002	RW	Offset Curr Str_01
40003	RW	Offset Curr Str_02
40004	RW	Offset Curr Str_03
40005	RW	Offset Curr Str_04
40006	RW	Offset Curr Str_05
40007	RW	Offset Curr Str_06
40008	RW	Offset Curr Str_07
40009	RW	Offset Curr Str_08
40010	RW	Offset Curr Str_09
40011	RW	Offset Curr Str_10
40012	RW	Offset Curr Str_11
40013	RW	Offset Curr Str_12
40014	RW	Offset Curr Str_13
40015	RW	Offset Curr Str_14
40016	RW	Offset Curr Str_15
40017	RW	Offset Curr Str_16

...

40034	RW	Answer Delay (msec)
40035	RW	Time Com Active (1/10 sec.)
40036	RW	Parity (1 = None, 2 = Even, 3 = Odd) = 40001
40037	RW	Fuse Threshold
40038	RW	Reversing the sign of current (Ch01...Ch16)

...

40040	RW	Offset V_1

...

40044	RW	Offset T_1
40045	RW	Offset T_2

…		
40047	RW	Minimum Current (Default = 1 A)
40048	RW	Minimum Voltage (Default = 100 V)

…

40052	RW	Gain Curr Str_1
40053	RW	Gain Curr Str_2
40054	RW	Gain Curr Str_3
40055	RW	Gain Curr Str_4
40056	RW	Gain Curr Str_5
40057	RW	Gain Curr Str_6
40058	RW	Gain Curr Str_7
40059	RW	Gain Curr Str_8
40060	RW	Gain Curr Str_9
40061	RW	Gain Curr Str_10
40062	RW	Gain Curr Str_11
40063	RW	Gain Curr Str_12
40064	RW	Gain Curr Str_13
40065	RW	Gain Curr Str_14
40066	RW	Gain Curr Str_15
40067	RW	Gain Curr Str_16

…

40090	RW	Gain V_1

…

40094	RW	Gain T_1
40095	RW	Gain T_2

…

40101	RW	User Memory 01
40102	RW	User Memory 02
40103	RW	User Memory 03
40104	RW	User Memory 04
40105	RW	User Memory 05
40106	RW	User Memory 06
40107	RW	User Memory 07
40108	RW	User Memory 08

…

40201	RO	Shunt Type (= 30204)	READ ONLY
40202	RO	SMU Model (= 30202)	READ ONLY
40203	RO	Firmware Version (= 30201)	READ ONLY
40204	RO	Channels Number (= 30203)	READ ONLY
40205	RO	End Scale (= 30205)	READ ONLY
40206	RO	Reserved for Future Use	RFU
40207	RO	Reserved for Future Use	RFU
40208	RO	Reserved for Future Use	RFU
40209	RO	Reserved for Future Use	RFU
40210	RO	Unique ID code [0] (= 30211)	READ ONLY

40211	**RO**	Unique ID code [1] (= 30212)	**READ ONLY**
40212	**RO**	Unique ID code [2] (= 30213)	**READ ONLY**
40213	**RO**	Unique ID code [3] (= 30214)	**READ ONLY**
40214	**RO**	Unique ID code [4] (= 30215)	**READ ONLY**
40215	**RO**	Unique ID code [5] (= 30216)	**READ ONLY**

NOTES

Each "Offset Register" has 0 as default value. Each "Gain Register" has 1000 as default value. *The value 1000 means **x1***, in this way, for example, is possible write 500 and make the value **x0,5.**

4.1 Memory Map Description

30001 : the first two bits of these register are the mirror status of the two digital inputs on the board (INP0, INP1 on CN4). So if 30001 = 0000000000000011 [bin] = 3 [dec], it means that all the two digital inputs are ON.

30002 ... 30017 : these registers contains the current value of the current reading on each channel. It is in mA

30034 : the sixteen bits of 30034 show if each channel current reading is under 200 mA or not. This threshold represent the fuse status.

30040 … 30049 : these registers show the value of some readings as the temperatures (T1 and T2), voltage reading (on connector CN3) etc…

30052 ... 30067 : these registers contains the average value on last 6 seconds of the current reading. Obviously these values are more stable than the instantaneous values show in registers 30002 … 30017

40001 : through this register is possible set the communication parity. The default value is zero, so "no parity"

40002 ... 40017 : these are the offset registers. These registers (whose default value is 0) allow to add a constant value to the current reading. This allow to adjust a possible reading error. For example if 30002 show 2300 (it means that channel CH1 read 2,3A), writing 40002 = 200 the new value of the reading will be 30002 = 2500 (it means that channel CH1 read 2,5A).

40052 ... 40067 : these are the gain registers. These registers (whose default value is 1000) allow to multiply a constant value to the current reading. This allow to adjust a possible reading error. For example if 30002 show 2300 (it means that channel CH1 read 2,3A), writing 40052 = 1500 the new value of the reading will be 30002 = 3450 (it means that channel CH1 read 3,45A, 2300 x 1,5 =3450).

40101 ... 40108 : these are 8 registers available to the user. They can contain data useful to the customer, for example a different progressive number for each board.

40201 : Shunt Type (= 30204) – READ ONLY

40202 : SMU Model (= 30202) – READ ONLY

40203 : Firmware Version (= 30201) – READ ONLY

40204 : Channels Number (= 30203) – READ ONLY

40205 : End Scale (= 30205) – READ ONLY

40206 ... 40209 : Not Used - Reserved for Future Use (RFU)

40210 ... 40215 : **Unique device ID register (96 bits)** (organized in six 16 bit words) that is unique for any board.
(= 30211 ... 30216) – READ ONLY

The unique device identifier is ideally suited :

- for use as serial numbers (for example string serial numbers or other end applications).
- for use as part of the security keys in order to increase the security.

The 96-bit unique device identifier provides a reference number which is unique for any device and in any context. These bits cannot be altered by the user. The code is composed of the following parts :

```
UID [31:00] : X and Y coordinates on the wafer expressed in BCD format
UID [39:32] : WAF_NUM [07:00] > Wafer number (8-bit unsigned number)
UID [63:40] : LOT_NUM [23:00] > Lot number (ASCII encoded)
UID [95:64] : LOT_NUM [55:24] > Lot number (ASCII encoded)
```

5 OPTICAL FIBER

5.1 OFC Network features

The characteristics of the fiber optic network achievable with the KERNEL SMUs with OFC interface on board are the following :

Max number of SMU that it's possible to connect in one network	**256**
Maximum distance between 2 consecutive SMUs	**2 - 3 KM if the "fiber / connector" connections are correct**
Recommended fiber optic features	**Multimode OM2 class or higher 50/125 µm or 62.5/125 µm**
Connectors features	**ST**

IMPORTANT

The optical signal is regenerated internally to each **SMU** so that, each **SMU** retransmits the optical signal at the maximum power.
So the first **SMU**, connected to the **FB2485H** converter, receives the same level of optical signal that receives the last **SMU** of the network.

IMPORTANT

5.2 Optical Fiber Cable

The optical fiber cable which is necessary to the connection, mustbe a compatible cable :

Optical Fiber	**Compatible with : 50/125 µm 62.5/125 µm 100/140 µm 200 µm Plastic-Clad Silica (PCS) Fiber**
In Compliance with standard	**OM1, OM2, OM3, OM4**

5.3 Optical Fiber Connector

Here are indicated the characteristics of the optical fiber connector on the board :

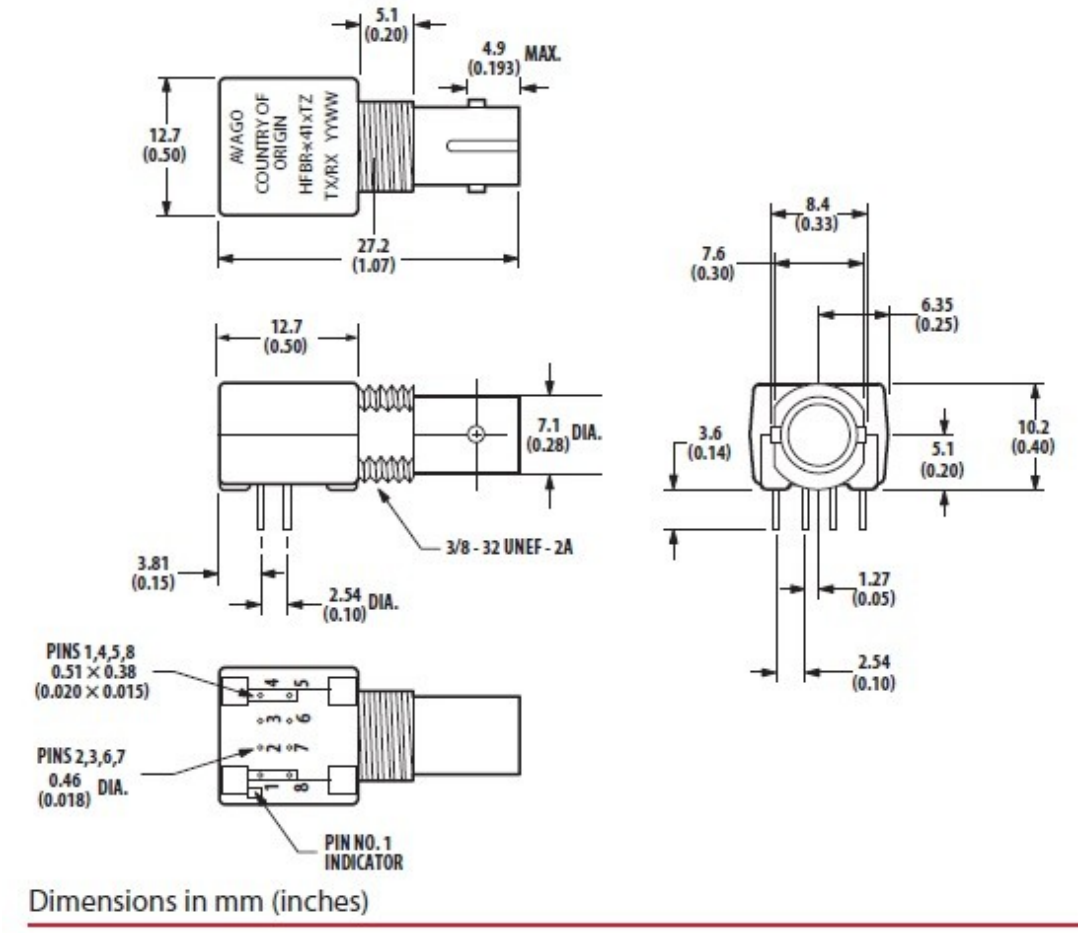

Dimensions in mm (inches)

6 ORDER CODES

Here below the order codes :

CODE	DESCRIPTION
STOHS 1660NC\SR	Device with support for din rail bar + 2 Fiber Optic Connectors
STOHS 1660NK\SR	Device without support for din rail bar + 2 Fiber Optic Connectors
STOHS 1660NC\DR	Device with support for din rail bar + 4 Fiber Optic Connectors
STOHS 1660NK\DR	Device without support for din rail bar + 4 Fiber Optic Connectors

7 CONTACTS

GENERAL
Tel: 059 469978 website: www.kernelgroup.it e-mail: info@kernelgroup.it

COMMERCIAL
Sig.ra Linda Mammi Tel: 059 469978 Int. 207 e-mail: sales@kernelgroup.it Skype: mammi.kernel

ADMINISTRATION
Sig.ra Paola Morandi Tel: 059 469978 Int. 201 e-mail: amministrazione@kernelgroup.it Skype: morandi.kernel

PURCHASING and PRODUCTION
Sig. Stefano Catuogno Tel: 059 469978 Int. 204 e-mail: produzione@kernelgroup.it Skype: catuogno.kernel

TECHNICAL OFFICE
Sig. Alessandro Muratori Tel: 059 469978 Int. 205 e-mail: alessandro.muratori@kernelgroup.it Skype: muratori.kernel
Support Tel: 059 469978 Int. 209 e-mail: support@kernelgroup.it Skype: support.kernel
Sig. Morisi Luca e-mail: luca.morisi@kernelgroup.it Skype: morisi.kernel

Kernel Sistemi
Kernel Sistemi s.r.l. , via Vignolese n. 1138
41126 Modena - ITALY
Tel. 059 469 978 - Fax 059 468 874
www.kernelgroup.it